Disposable Filter Cartridge Type

Suction or Return Line Filter Assembly
Model "TMR-TMS" Series

- Tank or line mounted.
- 5 sizes-flows to 185 GPM (700 LPM).
- By-pass standard. Return: 15 PSI Suction: 3 PSI
- Aluminium die cast construction.
- Working pressure to 300 PSI (21 bar)
- Buna Seals.
- Operating Temperatures -22° F to +212° F (-32° C to +100° C)
- For use with petroleum based fluids

TMR-2500

TMR-1000

TME

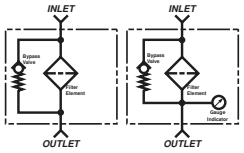

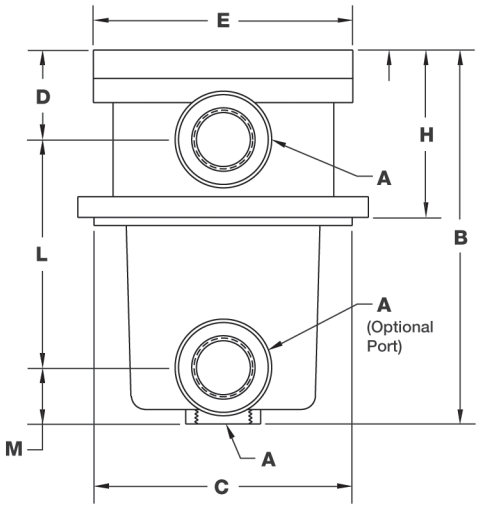

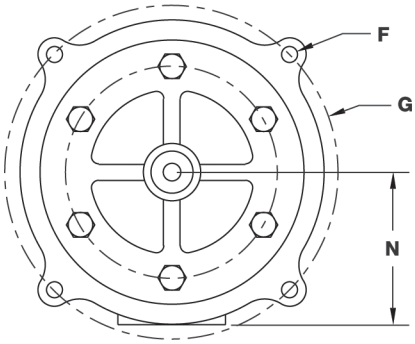

C = Tank Cutout Dimension
G = Tank Mount Bolt Circle

MODEL	Port A (NPT)		B	C	D	E	F	G	H	L	M	N	WT LB / KG
TM*-500	1/2"	IN	4.6	3.3	1.1	3.9	0.3	3.7	1.8	2.2	1.3	2.0	3
		MM	117.0	83.0	29.0	98.0	5.6	93.0	46.0	56.0	33.0	52.0	1.4
TM*-750	3/4"	IN	6.9	4.8	1.7	4.6	0.3	5.4	3.0	4.3	1.0	2.3	5
		MM	176.0	121.0	43.0	117.0	6.5	138.0	77.0	110.0	26.0	58.0	2.3
TM*-1000	1"	IN	10.1	5.3	2.5	5.6	0.3	6.1	4.4	5.5	2.0	2.8	6.5
		MM	257.0	134.0	64.0	143.0	6.5	154.0	113.0	140.0	52.0	71.0	3
TM*-1500	1 1/2"	IN	11.8	6.3	2.6	7.2	0.3	7.1	4.6	6.3	3.0	3.5	12
		MM	300.0	161.0	65.0	182.0	8.5	180.0	117.0	159.0	77.0	88.0	5.5
TM*-2500	2 1/2" SAE	IN	13.9	9.1	3.1	9.6	0.4	10.8	5.7	7.0	3.7	4.9	26.0
	FLANGE	MM	353.0	232.0	78.0	244.0	10.5	275.0	146.0	178.0	95.0	124.0	11.8

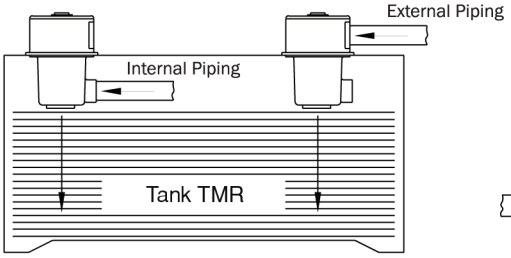

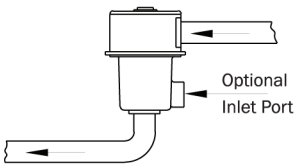

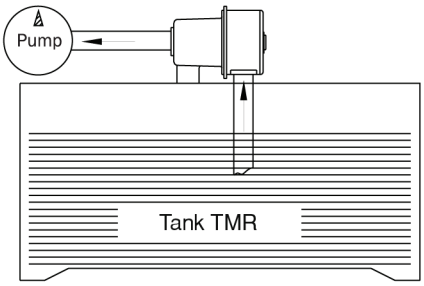

Phone: 937/277-9364 FAX: 937/277-6516 www.lenzinc.com

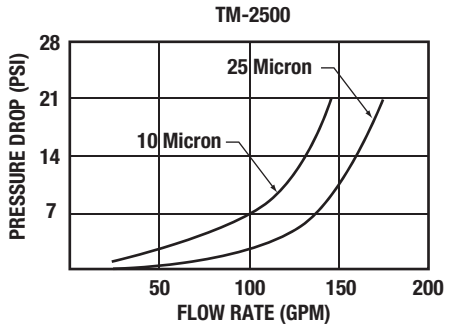

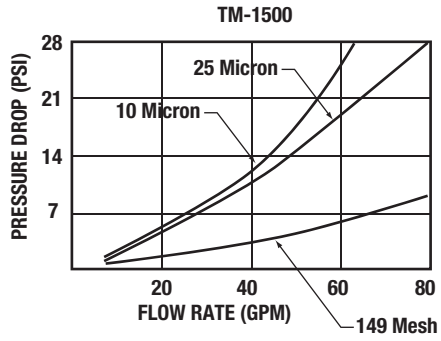

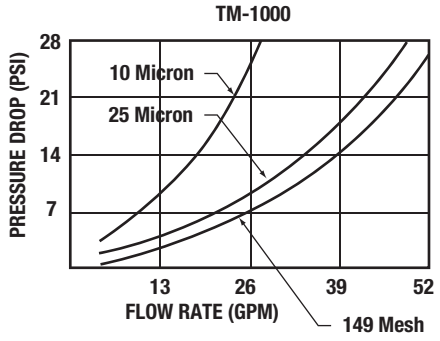

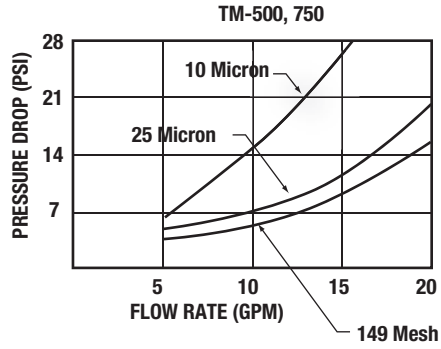

Ordering Code

TMR — 2 — 500 — B — 10 — T — MC20

B = BUNA Seal

STYLE	
TMR	Return (15 PSI By-Pass)
TMS	Suction (3 PSI By-Pass)

INLET PORT	
NP	Not Ported
2	Ported

Size	PORT (NPT)
500	1/2"
750	3/4"
1000	1"
1500	11 1/2"
2500	2 1/2" SAE Split Flange

ELEMENT	
10	10µ Nominal 10 Micron Cellulose
25	25µ Nominal 25 Micron Cellulose
100	149 Micron SS Mesh
10 SYN	10 Micron Synthetic

IND. PORTS	
OMIT	NONE
T	1/8 NPT RETURN
S	1/8 NPT SUCTION

INDICATING GAUGES
(T) MC-12
(T) MC-20
(T/S) CP-2
(T) GLY-MC-20
(S) 135080
(S) VAC-3-20
OMIT

All housings have machined optional inlet port. Lenz will supply plug if NP option is ordered.

NOTE:
Indicators Page 28a

Replacement Elements

MODEL NUMBER	MEDIA	IN	CM	B= 2/20/75
TME-502-10	10 MICRON CELLULOSE	110	710	6µ/8µ/13µ
TME-502-25	25 MICRON CELLULOSE	110	710	24µ/35µ/43µ
TME-502-100M	140 MICRON WIRE MESH	50	325	3µ/5.5µ/12µ
TME-752-10	10 MICRON CELLULOSE	271	1748	6µ/8µ/13µ
TME-752-25	25 MICRON CELLULOSE	271	1748	24µ/35µ/43µ
TME-752-100M	140 MICRON WIRE MESH	93	600	3µ/5.5µ/12µ
TME-1002-10	10 MICRON CELLULOSE	410	2645	6µ/8µ/13µ
TME-1002-25	25 MICRON CELLULOSE	410	2645	24µ/35µ/43µ
TME-1002-100M	140 MICRON WIRE MESH	140	903	3µ/5.5µ/12µ
TME-1502-10	10 MICRON CELLULOSE	1225	7903	6µ/8µ/13µ
TME-1502-25	25 MICRON CELLULOSE	1225	7903	24µ/35µ/43µ
TME-1502-100M	140 MICRON WIRE MESH	340	2200	3µ/5.5µ/12µ
TME-2502-10	10 MICRON CELLULOSE	2250	14516	6µ/8µ/13µ
TME-2502-25	25 MICRON CELLULOSE	2250	14516	24µ/35µ/43µ
TME-2502-100M	140 MICRON WIRE MESH	542	3496	3µ/5.5µ/12µ

For 25 Micron Synthetic, 74 Micron Mesh, replacement elements consult factory