SP80/90
Max Flow: 100 gpm (379 lpm)

Donaldson. FILTRATION SOLUTIONS

SP80/90 Spin-On Filters

Working Pressures to:	150 psi 1035 kPa 10.3 bar
Rated Static Burst to:	250 psi 1725 kPa 17.2 bar
Flow Range to:	100 gpm 379 lpm

Features

SP80/90 double filter head allows for double the flow capacity, with two filters to hold more contaminant. Aluminum casting and Buna-N® seals standard. SP80/90 filters are interchangeable with SP50/60 filters.

Buna-N® is a registered trademark of E. I. DuPont de Nemours and Company.

Beta Rating

- Performance to $ß_{<4(c)}$=1000

Porting Size Options

- 1½" NPT
- SAE-24 O-ring
- 2" SAE 4-Bolt Flange Code 61

Replacement Filter Lengths

- 6.7" / 170 mm
- 7.0" / 178 mm
- 10.7" / 271 mm

Filter Collapse Ratings

- 100 psid / 690 kPa / 6.9 bar

Standard Bypass Ratings

- 25 psi / 172.5 kPa / 1.72 bar
- 15 psi / 103.4 kPa / 1.34 bar
- 5 psi / 34.5 kPa / .34 bar
- no bypass

Assembly Weight

- 10.0 lbs / 4.5 kg (short) - approximate
- 11.8 lbs / 5.4 kg (long)

Operating Temperatures

- -22°F to 225°F / -30°C to 107°C

SP80/90 Specification Illustrations

All dimensions are shown in inches [millimeters].

Applications

- Fluid Conditioning Systems
- In-Plant Systems
- Mobile Equipment
- Power Transmissions
- Process Systems

Assembly - Side View

Combination
1½" NPT and 2" SAE
4-Bolt Flange (Both Ends) or
SAE-24 & 2" SAE-4 Bolt

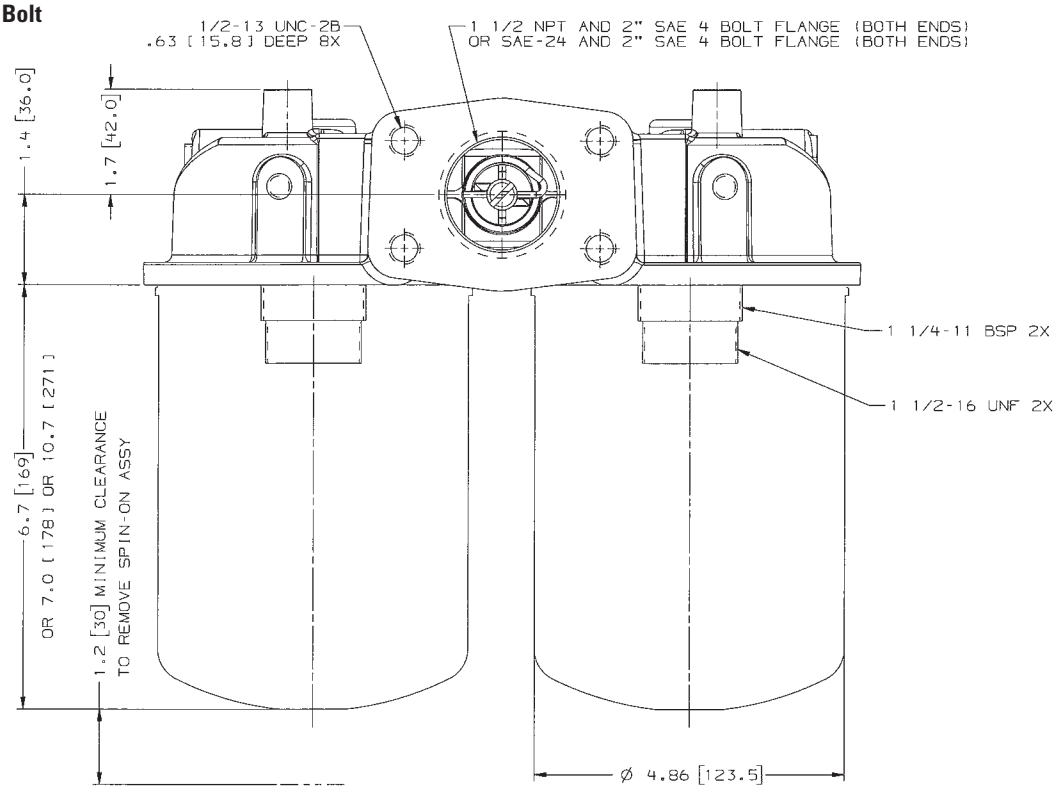

Head - Top View

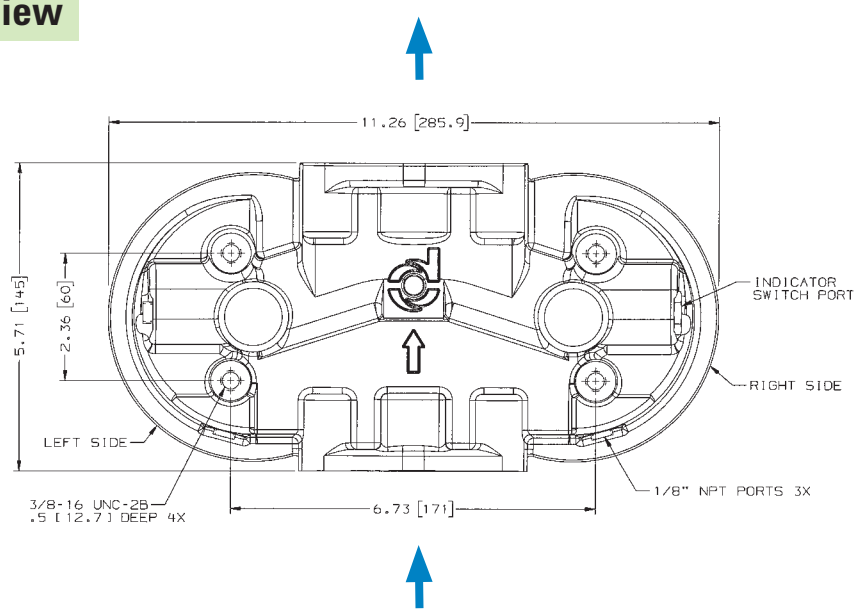

SP80/90
Max Flow: 100 gpm (379 lpm)

Donaldson FILTRATION SOLUTIONS

SP80/90 Components

Filter Choices

Media Type	$ß_{x(c)} = 2$ Rating based on ISO 16889	$ß_{x(c)} = 1000$	Length in	mm	Donaldson Part No.	Comments
Synteq Synthetic		<4 µm	10.7	271	P167796	Viton® O-ring & square seal kit
		6 µm	6.7	170	P167162	3-seal kit
		6 µm	10.7	271	P165762	3-seal kit
		11 µm	6.7	170	P165875	3-seal kit
		11 µm	10.7	271	P165876	3-seal kit
		13 µm	6.7	170	P167944	Viton O-ring & square seal kit
		13 µm	10.7	271	P167945	Viton O-ring & square seal kit
		23 µm	6.7	170	P165877	3-seal kit
		23 µm	10.7	271	P165878	3-seal kit
		50 µm	6.7	170	P165879	3-seal kit
		50 µm	10.7	271	P165880	3-seal kit
Cellulose	5 µm		6.7	170	P550386	3-seal kit
	5 µm		10.7	271	P550250	3-seal kit
	7 µm		6.7	170	P550388	3-seal kit
	7 µm		10.7	271	P550251	3-seal kit
	7 µm		7.00	178	P565245	Square seal kit, 1¼" BSP thread
	17 µm		6.7	170	P550387	3-seal kit
	17 µm		10.7	271	P550252	3-seal kit
	27 µm		7.00	178	P171616	Square seal kit, 1¼" BSP thread
Water Absorbing	10 µm		10.7	271	P561183	Cellulose media, 3-seal kit. Absorbs 350 ml water.
Wire Mesh	150 µm		6.7	170	P550275	Stainless steel wire mesh, 3-seal kit
	150 µm		10.7	271	P550276	Stainless steel wire mesh, 3-seal kit

All models have 1½-16 UNF threads except where otherwise noted. All models measure 5.0"/127mm outer diameter.
Viton® is a registered trademark of E. I. DuPont de Nemours and Company.

Head Choices

Port Size	Bypass Rating	Gauge Ports (drill, tap, plug)	Gauge Port Location	Donaldson Part No.
1½" NPT & 2" SAE 4 Bolt	15 psi / 103.4 kPa / 1.34 bar	(4) 1/8" NPT	upstream & downstream sides	P563273
1½" NPT & 2" SAE 4 Bolt	25 psi / 172.5 kPa / 1.72 bar	(4) 1/8" NPT	upstream & downstream sides	P563274
1½" NPT & 2" SAE 4 Bolt	No Bypass	(4) 1/8" NPT	upstream & downstream sides	P563275
1½" NPT & 2" SAE 4 Bolt	5 psi / 34.5 kPa / .34 bar	(4) 1/8" NPT	upstream & downstream sides	P563276
SAE-24 O-Ring	25 psi / 172.5 kPa / 1.72 bar	(4) 1/8" NPT	upstream & downstream sides	P564892
SAE-24	No Bypass	(4) 1/8" NPT	upstream & downstream sides	P573217

Note:
On a return line system the gauge port should be on the upstream side. We suggest a 25 psi bypass. If head is used on a suction line, the gauge port should be on the downstream side very low bypass.

Gaskets

Each filter ships with a 3-seal kit, containing an "L" shaped, a square cut, and an O-ring gasket seal, unless otherwise noted. Use only one of the following seals. Installation instuctions can be found in the technical reference section.

- L Shaped
  Use with filter heads with no groove or a wide groove.
- Square Cut
  Use with filter heads with a narrow groove.
- O-Ring -246
  Use with Donaldson HBK05 heads only.

Optional Filter Service Indicators for Left Side

Donaldson Part No.	Pressure Range	Use With Bypass Valve Rating	Type
P563978	5 to 30 psi field adj.*	15 psi / 103.4 kPa / 1.34 bar or 25 psi / 172.5 kPa / 1.72 bar or No Bypass	Return indicator, electrical
P563979	-5 to 15 in Hg field adj.*	5 psi / 34.5 kPa / .34 bar or No Bypass	Suction indicator, electrical
P563296	0 to 100 psi	15 psi / 103.4 kPa / 1.34 bar or 25 psi / 172.5 kPa / 1.72 bar or No Bypass	Return indicator, numeric scale
P563297	0 to 100 psi	15 psi / 103.4 kPa / 1.34 bar Bypass	Return indicator, color coded
P563298	0 to 100 psi	25 psi / 172.5 kPa / 1.72 bar or No Bypass	Return indicator, color-coded
P563299	0 to -30 Hg	5 psi / 34.5 kPa / .34 bar or No Bypass	Suction indicator, numeric scale

Notes
* NOT PRESET: Setting adjustable for desired application

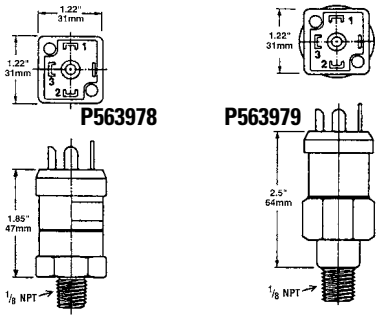

#1 Common; #2 Normally Closed;
#3 Normally Open

Instructions
1. Remove DIN adaptor
2. Remove small brass screw
3. Using 1/8" allen wrench adjust clockwise to increase set point/counter-clockwise to decrease set point
4. NO / NC

Adjustment screw located in center of electric prongs

P563296 - P563299

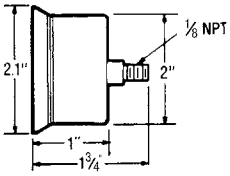

Optional Filter Service Indicators for Right Side

Refer to page 189 in the accessories section for right side electrical filter service indicator options.

Performance Data

SP80 Filter Only
(Synthetic, 6.7"/170mm)

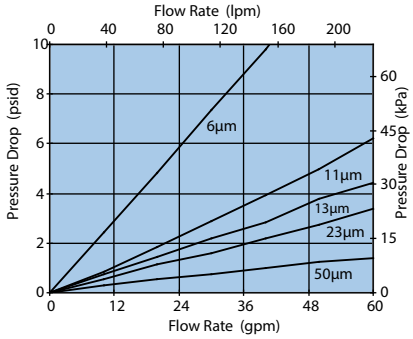

SP80 Filter Only
(Cellulose, 6.7"-7"/170-178mm)

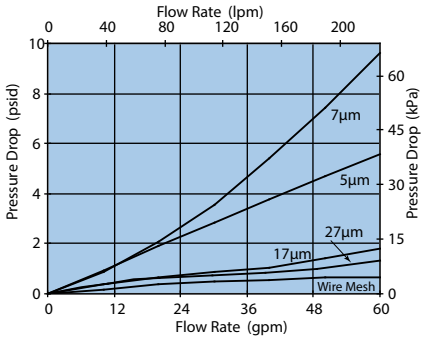

SP80/90 Head Only

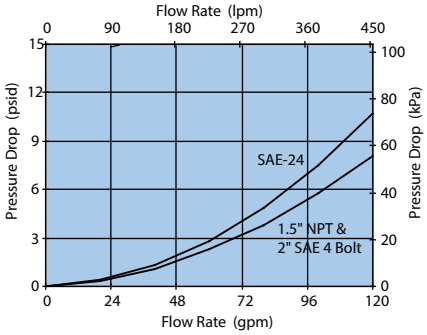

SP90 Filter Only
(Synthetic, 10.7"/271mm)

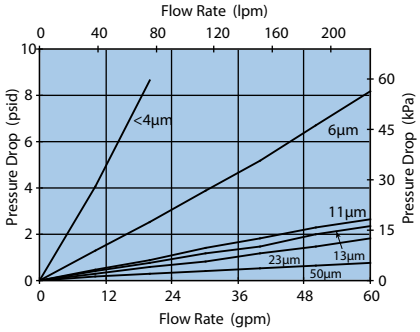
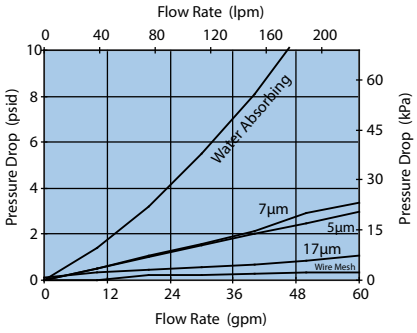
SP90 Filter Only
(Cellulose, 10.7"/271mm)