Valve/Cavity Compatibility

For additional information see Technical Tips on pages BC1-BC6.

		VALVE	
		MHC-010	2-N-4*-10
CAVITY	MHC-010	X	X
	2-N-4*-10	X	X

Ordering Information

MHC	—	010	—		—	53
Counterbalance Cartridge Valve		Nominal Flow Rating		Body Type		Port Size

Code	Body Type
A	Single
D	Dual

Code	Port Size
53	SAE-10 through port

Form Tool: FR-500
Weight: Single 1.1 kg (2.25 lbs.)
Dual 1.9 kg (4.10 lbs.)

Dimensions Millimeters (Inches)

CDD-1010

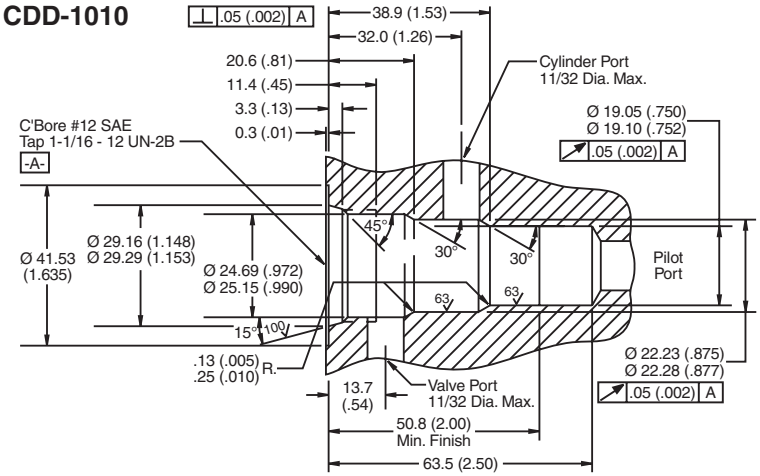

Single Body

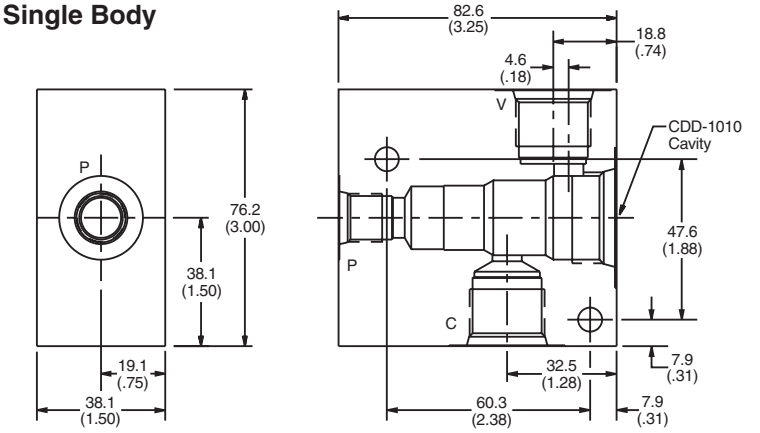
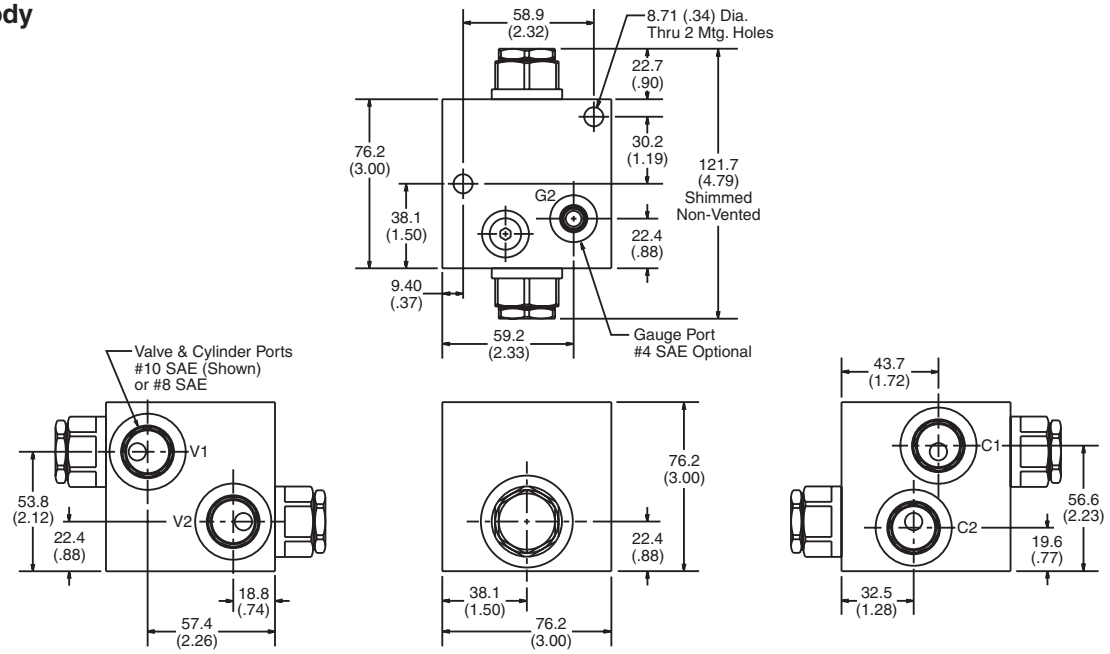
Dual Body