# PUMP MOTOR ADAPTERS FOR ELECTRIC MOTORS

## 324 THRU 405TC/TSC & 324 THRU 405UC/USC

Pump Motor Adapters (Bell Housings) are designed to assure proper shaft alignment between the electric motor and your hydraulic pump. They also reduce assembly cost over using a foot mounting bracket or riser.

### Standard Features:

- Drive coupling access hole with safety orange removable cover
- Electric Motor mounting bolts provided
- Pump mounting orientation can be rotated in 90 degree increments by rotating the adapter on the electric motor

### Standard Material:

- Cast Aluminum

### NOTES:

- X = Permissable inside radial clearance
- All dimensions are inches

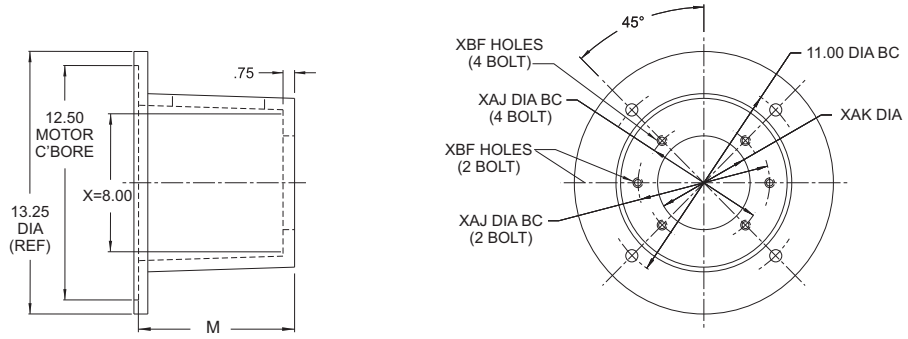


**STYLE 13 ADAPTER**
**Horizontal Mounting Only**

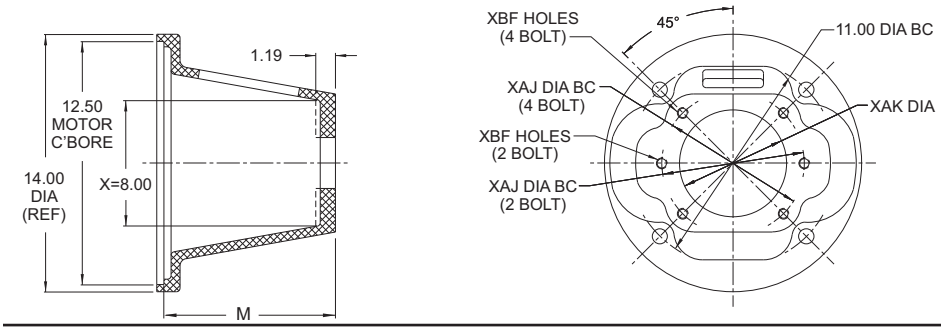


**STYLE 14 ADAPTER**
**Horizontal Mounting Only**

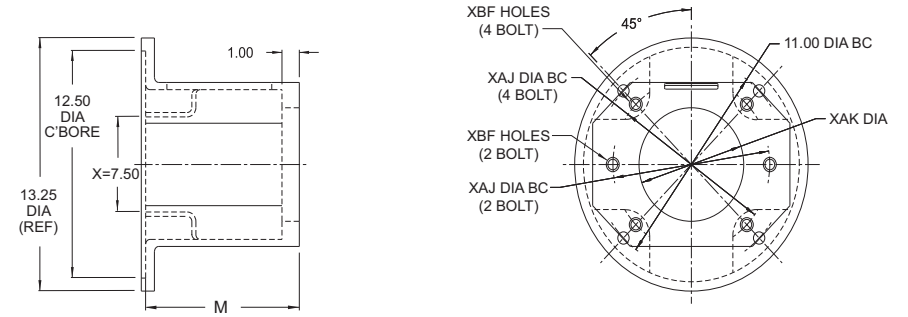


**STYLE 16 ADAPTER**
**Horizontal Mounting Only**

If your pump is not listed or is a non-standard pump, contact us for special machining and/or information. Not all pump mounting holes are supplied on every adapter.

| | 324/326 | | | | 364/365 | | | | 404/405 | | | |
|---|---|---|---|---|---|---|---|---|---|---|---|---|
| **Motor Size** | **TSC** | **TC** | **USC** | **UC** | **TSC** | **TC** | **USC** | **UC** | **TSC** | **TC** | **USC** | **UC** |
| **HP/1800 RPM** | 40/50 | 40/50 | 25/30 | 25/830 | 60/75 | 60/75 | 40/50 | 40/50 | 100/125 | 100/125 | 60/75 | 60/75 |
| **Shaft Diameter** | 1.88 | 2.12 | 6.25 | 1.88 | 1.88 | 2.38 | 1.88 | 2.125 | 2.12 | 2.88 | 2.12 | 2.38 |
| **Key Size** | 1/2 | 1/2 | 3/8 | 1/2 | 1/2 | 5/8 | 1/2 | 1/2 | 1/2 | 3/4 | 1/2 | 5/8 |
| **Shaft Length** | 3.50 | 5.00 | 3.00 | 5.38 | 3.50 | 5.62 | 3.50 | 6.125 | 4.00 | 7.00 | 4.00 | 6.88 |

*Dimensions and specifications are subject to change without notice. Not all items are Made-To-Stock, contact us for availability.*

06/14


Ph : 920-682-6877
Fx : 920-684-7210

LDI Industries

sales@ldi-industries.com
www.ldi-industries.com

# PUMP MOTOR ADAPTERS FOR ELECTRIC MOTORS

## 324 THRU 405TC/TSC & 324 THRU 405UC/USC (CONT'D)

| Pump Mounts - 324 thru 405TC/TSC and 324 thru 405UC/USC | | | | | | | | | |
|---|---|---|---|---|---|---|---|---|---|
| Pump Type | Flange | XAJ Bolt Circle | XAK Pump Pilot | XBF Mounting Holes | Adapter Style | Mounting Horizontal | Mounting Vertical | M Face to Face | Part No. |
| **Standard SAE Pump Flanges** | | | | | | | | | |
| SAE B | 2 Bolt<br>4 Bolt | 5.75<br>5.00 | 4.001 | 1/2-13 | 13 | Yes | No | 6.30 | **260199** |
| | | | | | 14 | Yes | No | 7.68 | **1974** |
| | | | | | 14 | Yes | No | 8.88 | **1969** |
| | | | | | 13 | Yes | No | 9.88 | **260599** |
| SAE C | 2 Bolt<br>4 Bolt | 7.12<br>6.38 | 5.001 | 5/8-11<br>1/2-13 | 13 | Yes | No | 6.30 | **260399** |
| | | | | | 14 | Yes | No | 7.68 | **1984** |
| | | | | | 13 | Yes | No | 8.38 | **168799** |
| | | | | | 14 | Yes | No | 8.88 | **1983** |
| | | | | | 13 | Yes | No | 9.88 | **260799** |
| SAE D | 2 Bolt | 9.00 | 6.001 | 3/4-10 | 14 | Yes | No | 7.68 | **1986** |
| | | | | | 14 | Yes | No | 8.88 | **1985** |
| SAE D | 2 Bolt<br>4 Bolt | 9.00 | 6.001 | 3/4-10 | 16 | Yes | No | 7.68 | **3370** |
| | | | | | 16 | Yes | No | 8.38 | **234299** |
| | | | | | 16 | Yes | No | 8.75 | **1883** |
| | | | | | 16 | Yes | No | 8.88 | **3372** |
| | | | | | 16 | Yes | No | 9.63 | **235099** |
| **SAE 2 Bolt 45° Offset Mounting Flange** | | | | | | | | | |
| SAE B (45°) | 2 Bolt | 5.75 | 4.001 | 1/2-13 | 14 | Yes | No | 7.68 | **2133** |
| | | | | | 14 | Yes | No | 8.88 | **2191** |
| SAE C (45°) | 2 Bolt | 7.12 | 5.001 | 5/8-11 | 14 | Yes | No | 7.68 | **2119** |
| | | | | | 14 | Yes | No | 8.88 | **2120** |
| | | | | | 13 | Yes | No | 9.88 | **2121** |
| **4 Bolt Square Mounting Flanges** | | | | | | | | | |
| 4HC | 4 Bolt | 8.48 | 3.751 | 5/8-11 | 14 | Yes | No | 7.68 | **1999** |
| | | | | | 14 | Yes | No | 8.88 | **1949** |
| **Metric Series Pump Flanges** | | | | | | | | | |
| 100mm | 2 Bolt<br>4 Bolt | 140mm<br>125mm | 100.02mm | 1/2-13<br>3/8-16 | 13 | Yes | No | 6.30 | **3862**† |
| 200mm | 4 Bolt | 250mm | 200.02mm | 3/4-10 | 16 | Yes | No | 9.63 | **2193**† |

†Non-stock special order item

*Dimensions and specifications are subject to change without notice. Not all items are Made-To-Stock, contact us for availability.*



Ph : 920-682-6877
Fx : 920-684-7210
LDI Industries
sales@ldi-industries.com
www.ldi-industries.com