General Description

Threaded Cartridge Style Counterbalance Valve. 3 Port, Independent of Back Pressure, Vented to Atmosphere. Pilot assisted, designed for motion control applications. For additional information see Technical Tips on pages LM1-LM4.

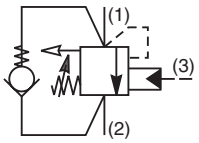

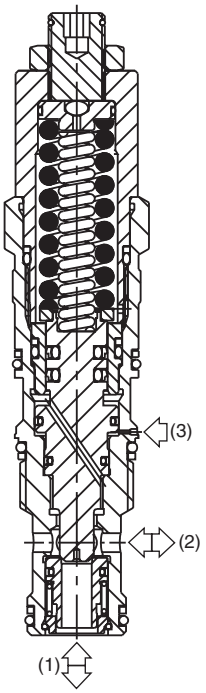

Features

- Spring chamber isolated from system back pressure by double seal, eliminating vent port leakage and need for separate drain line
- Poppet construction for minimal leakage
- Incorporates direct acting relief valve for overload protection
- Includes reverse check valve within body, saving space and minimizing installation cost
- Fully sealed pilot for high efficiency and accurate pilot ratio
- Three pilot ratios available, 1:1, 3:1 and 5:1
- Adjustable and tamper resistant versions available
- All external parts zinc plated

Specifications

Rated Flow	60 LPM (16 GPM)
Pressure	40 - 350 Bar (580 - 5000 PSI)
Sensitivity: Pressure/Turn	78 Bar (1131 PSI)
Pilot Ratio	**E6C1 -** 1 : 1 **E6K1 -** 3 : 1 **E6P1 -** 5 : 1
Cartridge Material	All parts steel. All operating parts hardened steel.
Operating Temp. Range/Seals	-40°C to +93.3°C (Nitrile) (-40°F to +200°F) -31.7°C to +121.1°C (Fluorocarbon) (-25°F to +250°F)
Fluid Compatibility/ Viscosity	Mineral-based or synthetic with lubricating properties at viscosities of 45 to 2000 SSU (6 to 420 cSt)
Filtration	ISO Code 16/13, SAE Class 4 or better
Approx. Weight	0.22 kg (0.48 lbs.)
Cavity	CAVT11A (See BC Section for more details)

Performance Curves

Relief & Pilot Performance 1 to 2

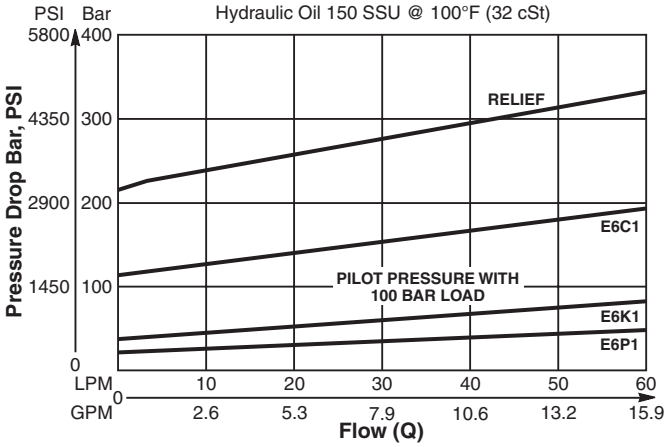

Pressure Drop vs Flow

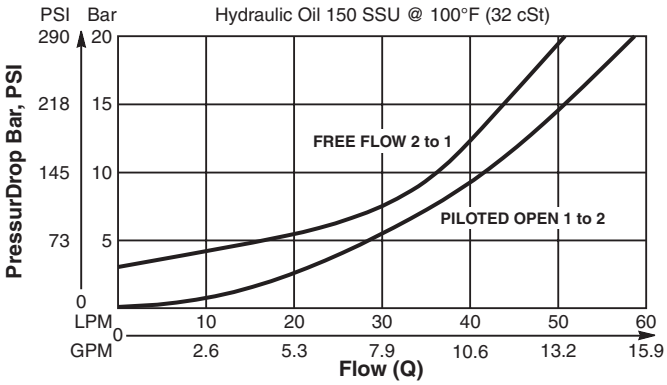

Dimensions Millimeters (Inches)

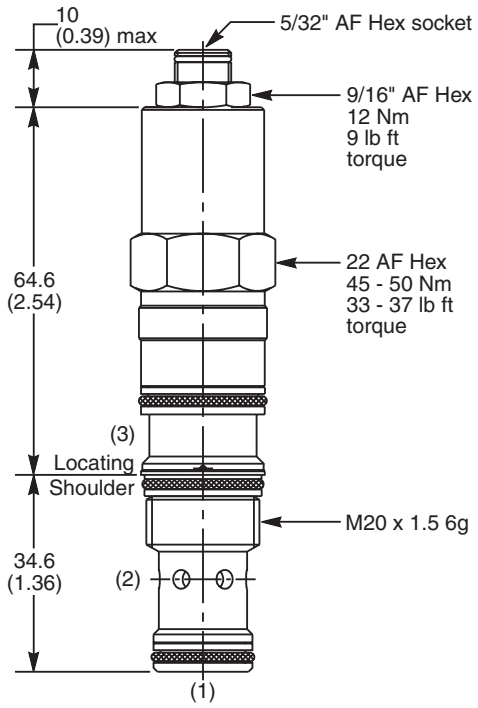

Ordering Information

E6		1			
Load Control Valve	Pilot Ratio		Adjustment Style	Cracking Pressure	Seals

Code	Pilot Ratio
C	1 : 1
K	3 : 1
P	5 : 1

Code	Adjustment Style / Kit No.
Z	Screw Adjust (Standard)
T	Tamper Resistant (TC1130)

Code	Cracking Pressure
	Omit for no setting (Standard)*
	Specify setting if required

Standard valve is set to crack at 215 Bar (3120 PSI). Valve to be set to 1.3 times maximum load induced pressure.

Code	Seals / Kit No.
N	Nitrile, Buna-N (Std.) / (SK30700N-1)
V	Fluorocarbon / (SK30700V-1)

Order Bodies Separately

LB10		
Line Body	Porting	Body Material

Code	Porting
826	1/2″ BSP (main) 1/4″ BSP (aux)
825	1/2″ SAE (main) 1/4″ SAE (aux)
828	1/2″ BSP Dual Cavity
827	1/2″ SAE Dual Cavity

Code	Body Material
A	Aluminum
S	Steel