Bulletin SFM-M4Df

Revised 9/86

HÄGGLUNDS	DENISON	SERVICE LITERATURE

VANE TYPE FLUID MOTOR—SERIES M4D & M4D1

MODEL "A" & MODEL "B"

INSTALLATION, OPERATION AND OVERHAUL INSTRUCTIONS

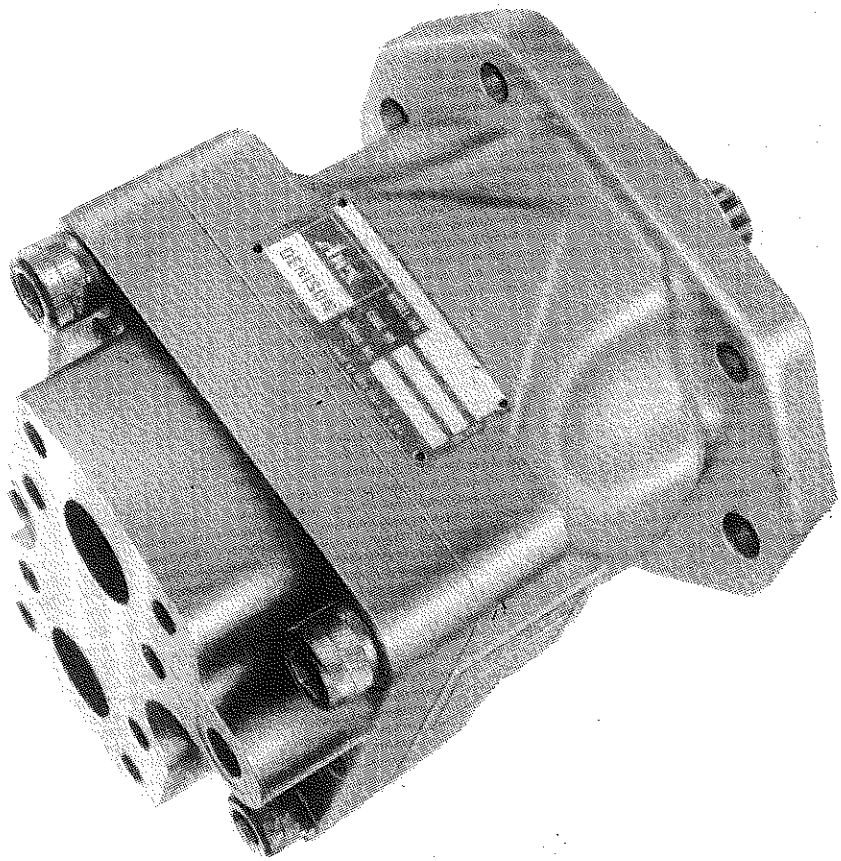

Vane Type Fluid Motor—Series M4D & M4D1

Table of Contents

Section 1
INTRODUCTION AND DESCRIPTION

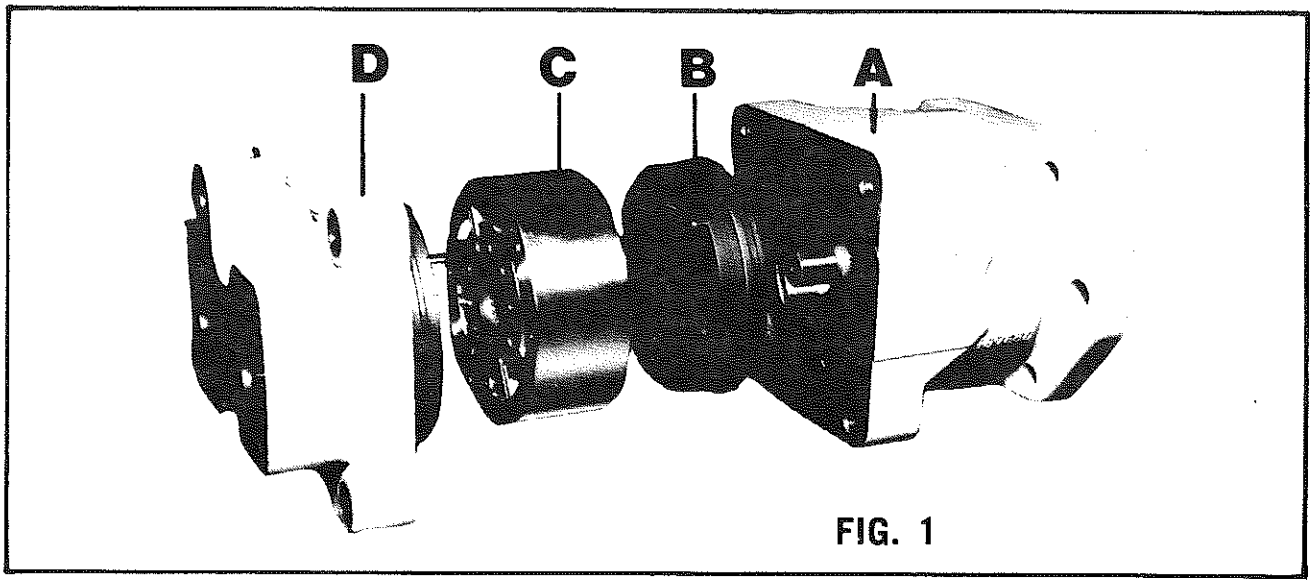

FIG. 1

GENERAL

This manual contains installation, operating maintenance and overhaul instructions for Abex/Denison M4D and M4D1 Series fluid motor.

DESCRIPTION

The fixed displacement motor is a rotary balanced vane type motor converting hydraulic forces into rotary mechanical motion. To determine the maximum operating pressure and speed of any model, refer to Table 1.

The motor consists of four basic sub-assemblies; (A) body or housing and shaft with a permanently lubricated bearing and a lip type shaft seal; (B) a front port plate assembly consisting of port plate with a built in check valve; (C) a cam ring assembly containing the rotor, vanes, vane springs and cam ring; (D) end cap assembly consisting of end cap and needle bearing. Two check valves are contained in the end cap assembly for model M4D1 which is internally drained.

TABLE I

OPERATING CHARACTERISTICS
Maximum Pressures and Speeds

Fluid Type	Denison Fluid Spec.	M4D Continuous			M4D Intermittent [1]			M4SD Continuous			M4SD Intermittent [1]		
		Speed RPM	Pressure PSI	Pressure BAR	Speed RPM	Pressure PSI	Pressure BAR	Speed RPM	Pressure PSI	Pressure BAR	Speed RPM	Pressure PSI	Pressure BAR
Antiwear Petroleum Base	HF-0 HF-2	3600 3000 2500	500 2000 2500	35 138 172	4000 3000	500 2500	35 172	3600 3000 2500	500 2000 2500	35 138 172	4000 3000	500 2500	35 172
Crankcase Oils	HF-6	3600 3000 2500	500 2000 2500	35 138 172	4000 3000	500 2500	35 172	3600 3000 2500	500 2000 2500	35 138 172	4000 3000	500 2500	35 172
Non-Antiwear Petroleum Base	HF-1	2000	2000	138	2500	2500	172	2000	2000	138	2500	2500	172
Water-in-oil Emulsions	HF-3	—	—	—	—	—	—	2000	2000	138	2500	2500	172
Water Glycols	HF-4	—	—	—	—	—	—	2000	2000	138	2500	2000	138
Synthetic Fluids	HF-5	—	—	—	—	—	—	2000	2000	138	2500	2500	172

[1] Not to exceed 6 seconds per minute of operation.

[3] Contact Denison for details

Denotes change.

PERFORMANCE, THEORETICAL

Model M4D M4D1 M4SD M4SD1	Displacement[1]						Torque[2]				Specific Power[3]	
	in.³/rev.	ml/rev.	gpm/100 rpm	lpm/100 rpm	gpm/4000 rpm	lpm/4000 rpm	in.#/100 psi	nm/bar ΔP	in.#/2500 psi	nm/172 bar	hp/100 rpm 100 psiΔP	kw/100 rpm bar ΔP
062	3.90	63.9	1.69	6.4	67.5	256	62.1	1.02	1552	175	.101	.011
074	4.79	78.5	2.07	7.8	82.9	314	76.3	1.25	1907	215	.121	.013
088	5.56	91.1	2.41	9.1	96.3	365	88.5	1.45	2213	249	.140	.015
102	6.40	104.9	2.77	10.5	110.8	419	102.0	1.67	2550	287	.162	.018
113	7.12	116.7	3.08	11.7	123.3	467	113.4	1.86	2835	320	.180	.020
128	8.08	132.4	3.50	13.3	140.0	530	128.7	2.11	3218	363	.204	.022
138	8.81	144.4	3.81	14.2	152.6	578	140.2	2.30	3505	396	.223	.024

[1] Actual motor speed and displacement will vary with load. See **internal leakage** on pg. 5.
[2] Actual values for running torque are typically 90% of theoretical, and starting torque is typically 90% of running at 2500 ps (172 bars).
[3] Actual power is proportional to the product of speed and actual torque.

To reverse motor, reverse flow to ports. Flow in port "A" gives clockwise rotation when viewed from the shaft end. Flow in port "B" gives counter clockwise rotation when viewed from the shaft end.

Model M4C is externally drained from the end cap. Model M4C1 is internally drained and requires a special end cap assembly.

Section II
INSTALLATION

MOUNTING

This motor is designed to operate in any position.

The motor shaft must be in alignment with the shaft of the driven load and should be checked with a dial indicator. The mounting pad or adapter into which the fluid motor pilots must be concentric with the motor shaft within 0.010 TIR to prevent bearing failures. This concentricity is particularly important if the fluid motor shaft is rigidly connected to the driven load without a flexible coupling.

PIPING

Connect inlet and outlet lines to the end cap of the motor. The externally drained model must have a drain line connected to the end cap drain connection of sufficient size to prevent back pressure in excess of 50 PSI, and returned to the reservoir below the surface of the oil as far away from the supply pump suction as possible. Model M4C1 does not require an external drain line, however, the outlet pressure at either port (A or B) must not exceed 50 PSI.

All fluid lines either pipe, tubing or hose, must be of adequate size and strength to assure free flow through the motor. An undersize inlet line will prevent the motor from reaching full speed and will not develop sufficient torque. An undersized outlet line will create back pressure in the motor and prevent proper operation. Flexible hose lines are recommended. If rigid pipe or tubing is used, the workmanship must be accurate in order to eliminate strain on the motor end cap or the fluid connectors. Sharp bends in the lines should be eliminated whenever possible. All system piping must be cleaned with solvent or equivalent before the motor is connected. Be sure that the entire hydraulic system is free from dirt, lint, scale and other foreign material. DO NOT USE GALVANIZED PIPE. Galvanized coating may flake off after continued use.

NOTE: If the circuit used will allow the motor to operate as a pump or restrict the inlet fluid availability when using the motor for dynamic braking, the inlet side of the motor must be replenished. The minimum replenishing pressure at the motor inlet should be 25 PSI.

FLUID SPECIFICATIONS

Recommended Fluids

Petroleum Based Antiwear R & O Fluids are the recommended fluids for M4 series motors. Maximum catolog ratings and performance data are based on operation with these fluids. These fluids are covered by Denison HF-2 specification.

Acceptable Alternate Fluids — The use of fluids other than petroleum based antiwear R & O fluids requires that the maximum ratings of the motors be reduced. In some cases the minimum replenishment pressures must be increased. Refer to the following chart and the Operating Characteristics Chart for each M4 motor model for specific details of the reduced ratings.

Fluid Type	Denison† Spec	Motor Series Usable	Max Temp °F	Max Temp °C	Replen Pressure Multiplier
Antiwear Petroleum Base Fluids	HF-2 HF-0	M4 & M4S	210	100	1.0
Non-antiwear Petroleum Base Fluids	HF-1	M4 & M4S	210	100	1.0
Crankcase Oils	HF-6	M4 & M4S	210	100	1.0
Water-in-oil invert emulsions	HF-3	M4S only	120	49	1.25
Water Glycols	HF-4	M4S only	120	49	1.25
Synthetic Fluids* (Phosphate Ester & Blends)	HF-5	M4S only	160	71	1.35

†See Denison Fluids Bulletin 2002 for further information.

*The standard Viton A type seals are not recommended for certain fluids of this general class including Monsanto PYDRAUL 10E, Monsanto SYKDROL and Stauffer Blend "G" and others.

VISCOSITY

Max (cold start, low speed & pressure)	4000 SUS (862 CS)
Max (full speed & pressure)	500 SUS (108 CS)
Optimum (max life)	140 SUS (30 CS)
Min (full speed & pressure)	60 SUS (10 CS)

VISCOSITY INDEX — 90° min. Higher values extend range of operating temperatures.

FLUID CLEANLINESS

The fluid must be cleaned before and during operation to maintain a contamination level of NAS 1638 class 8 (or SAE class 4) or better. Filters with 25 micron (or, better, 10 micron) nominal ratings may be adequate but do not guarantee the required cleanliness levels.

Section III
OPERATION

During operation, oil under pressure flows through either one of the two ports "A" or "B" in the end cap and is directed to both sides of the cam ring assembly through cast ports in the end cap and port plate assembly. The pressure applied against the vanes forces the rotor to turn and at the same time rotates the motor shaft. As the rotor turns, the oil moves to the discharge ports in the port plate and end cap (B or A). Oil entering through port "A" will force the shaft to rotate righthand (clockwise) facing the shaft end. Oil entering through port "B" will reverse the rotation.

Section IV
MAINTENANCE

Since this motor is self-lubricating, preventative maintenance is limited to keeping the fluid in the system clean by changing filters frequently. Do not allow dirt to accummulate on the motor, especially around the shaft seal. Keep all fittings and screws tightened. Do not operate the motor at pressures or speeds in excess of the recommended limit.

If the motor does not operate properly, check the "Trouble Shooting Chart" in Table III before attempting an overhaul.

Overhaul is relatively simple and may be accomplished by following the procedure in Section V.

TABLE III
TROUBLE-SHOOTING CHART

TROUBLE	PROBABLE CAUSE	POSSIBLE REMEDY
1. External Leakage	a. Seal failure b. Defective casting	a. Replace seal b. Replace casting
2. Leakage At Fittings	a. Cracked casting b. Defective threads c. Damaged "O" Ring d. Burr	a. Replace b. Replace c. Replace d. Stone or file flat.
3. Loss In Speed Under Load	a. Low inlet pressure b. Excessive back-pressure at outlet. c. Scored port plate or end cap e. High oil temperature	a. Check Pressure b. Check pressure-increase line size. c. Relap flat to clean up. d. Use heavier oil; use oil cooler; adjust relief valve setting.
4. Poor Speed Control	a. Insufficient fluid supply b. Worn rotating group	a. Use more efficient pump. Use larger pump. Use flow control valve. b. Replace
5. Motor Fails to Start Turning	a. Insufficient torque b. Excessive motor leakage. c. Worn port plates. d. Worn rotating group e. Defective "O" ring on O.D. of front port plate. f. Insufficient pump delivery g. Motor too small	a. Increase relief valve pressure setting. b. Check flow from motor outlet if excessive check valve adaptor in front port plate. pressure not loading plate causing plate to move away from cam ring. c. Replace d. Replace e. Replace "O" ring if damaged. f. Pump worn or too small. g. Use larger size cam ring.
6. Shaft Play	a. Worn bearings b. Excessive side load or end load on shaft c. Hammering coupling on shaft	a. Replace. b. Design problem;consult engineer. c. Coupling bore should be slip fit on shaft.
7. Bursting of Fluid Supply Inlet or Outlet Lines	a. Excessive pressure	a. If high inertia load over runs motor relief valve protection is required in one or possibly both lines between directional valve and motor. Use closed center valve with caution. Relief valve protection probably required as described above.
8. Excessive Noise	a. Worn or damaged internal parts. b. Air in System	a. Disassemble to remove rotor, vane, cam ring assembly. Inspect for excessive wear. Check condition of faces of port plate and end cap. Rework (lap) or replace if scuffed. b. Bleed air off-check fittings for tightness.
9. Seal Failure	a. High drain line pressure on externally drained unit. b. High outlet pressure on internally drained unit.	a. Provide larger drain line. Provide shorter less restricted drain line. b. Revise circuit to reduce back pressure. Increase line size.

Problems encountered not indicated in this table should be referred to the Customer Service Center or nearest Abex/Denison representative.

Section V
OVERHAUL

SPECIAL TOOLS

Special tools are required to properly install the shaft oil seal. A driver of proper size must be used to install the shaft seal. A protective cone must be used over the shaft end to prevent damage to the shaft seal when installing the shaft. Refer to figures below for proper configuration.

FIG. II **SEAL DRIVER**

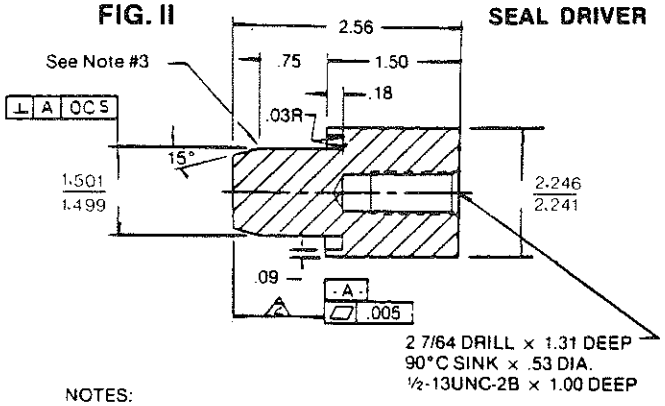

NOTES:
1. Remove all burrs and break sharp edges .010/.005R.
2. Length △ to be heat treated to RC 50-55.
3. Length △ to have a 10-20 ✓ full length, with a smooth intersection between chamfer and dia. "A".
4. Grease O.D. of length △ before installing shaft seal onto tool to prevent damage to the seal.

Material 4140 or equivalent.

FIG. IIIA **PROTECTIVE CONE**

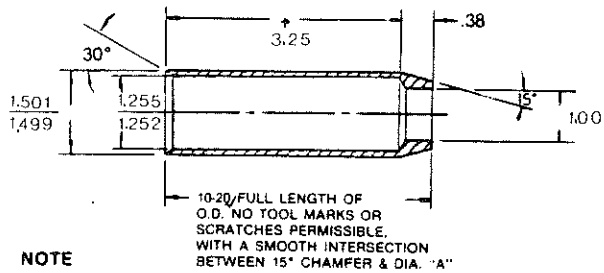

NOTE
1. Remove all burrs and break sharp edges .010/.005R.
2. Teflon preferred, alternate 4140 treated after machining to RC 50-55.
3. Install protective cone over shaft extension and grease O.D. to prevent damage to shaft seal.

DISASSEMBLY

See Figure V for item numbers listed below.

1. Secure the motor in a vise or other suitable holding fixture with the shaft (14) extended down.
2. Remove screws (1) and remove the end cap (2) from the body.
3. Remove the rubber seal ring (3) from the end cap (2).
4. Check the needle bearing (4) in the end cap. If it is worn or damaged, remove it.

   (a) See additional instructions on page 10 for disassembly or M4D1 internally drained end cap.

5. Remove the dowel pin (5) from the cam ring assembly (6).
6. Thread two # 10-24 screws in the two tapped holes provided as puller holes in the cam ring (6a) and remove the cam ring assembly (6) as a unit (6a, 6b, 6c, and 6d).

NOTE: If resistance is encountered when lifting the cam ring assembly, lightly tap the outside of the body while lifting the assembly. This will help in removing the cam ring, rotor, vanes and springs as a unit.

"WARNING"

The vanes are held against the cam ring by tension from the springs in the rotor. If the rotor is pulled from the cam ring with no protection, tension from the springs will throw the vanes out in all directions. The following procedure must be followed when disassembling the rotor and vanes from the cam ring.

Place the cam ring assembly on a clean, flat surface. Push the rotor and vanes from the cam ring far enough to secure a piston ring compressor over the vanes and around the rotor.

After the compressor is in place, push the rotor and vanes the remainder of the way out of the cam ring.

Release the tension on the compressor and remove the vanes (6c) and vane springs (6d) from the rotor (6b).

7. Remove dowel pin (7) from the port plate assembly.
8. Thread two#10-24 screws into the puller holes in the port plate assembly (8) and remove it from the body (18).

   (a) Port plate assembly teardown:

   Remove the set screws in the side. Remove the valve adaptor from the drilled passage. The drilled hole in the port plate must be clean and free from burrs.

9. Remove the rubber seals (9 and 10) and Belleville washer (19).

10. Remove the snap ring (11) from the body (18).

11. Press on external end of the shaft (14) and remove shaft and bearing (13) from the body.

12. Remove the external snap ring (12) and press the bearing from the shaft.

13. Remove the felt wiper (17) and shaft seal (16) from the body.

CLEANING AND INSPECTION

1. Wash all metal parts in cleaning solvent (Stoddard Solvent or equal) and dry thoroughly.

2. Inspection of Parts.

   (a) Inspect the seals for wear, breaks, cuts and brittleness. Check closely the shaft seal for scratches and cracks. Discard and replace all defective seals.

   (b) Inspect all springs for wear on the O.D., for cracks or permanent set. Replace all defective springs.

   (c) Inspect bearings for wear or flat spots. If the bearings are rough or loose they must be replaced.

   (d) Inspect the cam ring for excessive wear (ripples or washboard marks on the contour). Replace a badly worn or defective cam ring.

   (e) Inspect the rotor for scored, marred or scratched (faces and vane slots) surfaces. Replace a defective rotor.

   (f) Inspect the vanes for excessive wear marks (burrs, nicks and scoring). Replace defective vanes.

   (g) Inspect the wear surfaces of the port plate and end cap for deep scratches. Replace if defective.

   (h) Inspect the body and end cap for cracks or other casting damage. Replace all damaged castings.

   (i) Inspect the shaft for excessive wear (internal spline, bearing surface and drive end). Replace if defective.

"CAUTION"

Dirt is a major cause of wear and motor failure. Cover all parts after cleaning to prevent dust and dirt from settling on them. All surfaces should be coated with a film of hydraulic lubricating oil after they have been cleaned.

LUBRICATION

No external lubrication is required. The hydraulic fluid which operates the motor provides adequate internal lubrication.

REASSEMBLY

Immerse the seals, felt wiper and bearings in clean hydraulic fluid to make the reassembly easier and to provide initial lubrication.

SHAFT END

1. Position the body (18) on a clean flat surface with the small open end facing up. Press the felt wiper (17) in the 2-1/16" hole. The wiper must be flush with the bottom of the counterbore. Turn the body (18) over with the large open end facing up. Use the shaft seal driver (see Figure 11) and drive the shaft seal (16) into the body (18) until it seats in the counterbore. Make certain that the open side of the seal is toward the inside of the body. The shaft seal driver will prevent damage to the seal during installation.

2. Press bearing (13) on the shaft (14) to the shoulder and install external snap ring (12). Be certain that the ring is seated in the snap ring groove.

3. Apply lubricating fluid to the inside of seal (16) and wiper (17). Press the shaft and bearing assembly (12, 13 and 14) into the body (18).

4. Install snap ring (11) in the body (18) and against bearing (13) to hold the shaft assembly in place. Make certain snap ring (11) is fully seated in the groove.

PORT PLATE SUB-ASSEMBLY

The set screw and the port plate including the internal threads must be degreased. Apply a very small anmount of Loctite #242 to the screw only. An excessive amount of Loctite on the screw would be forced into the valve adaptor when the screw is installed. Allow the Loctite to cure for one hour after installing the screw.

1. Insert the valve adaptor in the bore and install the screw and tighten.
2. Lubricate seals (9) and (10) washer (19) and install on back of port plate.
3. Insert dowel pin (7) in hole in face of port plate assembly.
4. Thread two #10-24 screws in the tapped holes in face of the port plate assembly (8) and install in the body. See Figures 1 and V for correct positions.

CAM RING SUB-ASSEMBLY

Place the cam ring (6a), rotor (6b), vanes (6c) and vane springs (6d) on a clean flat surface. Arrange the vanes side by side with the three spring holes up. Insert the vane springs in the vanes. Install the vanes with the springs in the slots in the rotor.

"WARNING"

Be certain that the springs are started in the holes in each rotor slot.

(a) Place a ring compressor around the vanes and tighten the compressor gradually until the springs and vanes are in the position they will occupy while in the cam ring. Place a back up plate, slightly smaller than the outside diameter of the rotor in the ring compressor and push the rotor, springs and vanes into the cam ring. The back up plate will prevent the vanes from sliding end wise in the rotor slots and damaging the slots and springs.

"WARNING"

Be certain that the rotor and vane assembly is inserted far enough in the cam ring to prevent the vanes from flying out of position when the ring compressor is removed.

2. Thread two # 10-24 screws into the cam ring assembly on the same side of the ring that indicates the cam size. Insert the dowel pin (5) in the cam ring and position the complete assembly in the body over the dowel pin (7).

END CAP SUB-ASSEMBLY

1. Lubricate the rubber seal (3) and install on the cap (2).
2. Press the needle bearing (4) into the end cap (2) with markings on the bearing 1/16" below the face of the cap.

   (a) See additional instructions on page 10 for reassembly of M4D1 internally drained end cap.

3. Position the end cap (2) over the dowel pin (5). Hold the end cap firmly against the cam ring assembly and rotate to line up the bolt holes.
4. Insert screws (1) and tighten evenly to 130 ft. lbs. torque.

SPECIAL INSTRUCTIONS
M4D1 Internally Drained Cap Assembly

DISASSEMBLY

Remove the hex head plug (22) from the fluid connection face. Remove the two 3/8" socket pipe plugs (20) from the side of the cap (23). Remove the two check valves (21) located at the bottom of the ports. Check the needle bearing (4) in the cap (23). If it is damaged or worn, remove it.

Wash the cap and all parts in cleaning fluid and dry thoroughly.

Inspect the bearing, check valves, plugs and "0" ring. Make certain that all drilled and cored passages are open and clean. Carefully check the spring and ball in the check valves. The ball must seat for the checks to function. If any parts are defective, they must be replaced.

REASSEMBLY

Lubricate both check valves (21). Install one check valve in each of the two tapped holes in the side of the cap (23). Install the two 3/8" socket pipe plugs (20). Press the needle bearing (4) in the end cap (23) with the marking on the bearing 1/16" below the face of the end cap. Install the hex head plug (22) with "0" ring in the fluid connection face.

S14-28147 CAP ASSEMBLY W/1½" SAE PAD 3000 PSI "A" MODEL
S14-26068 CAP ASSEMBLY W/SAE-20 THREADED PORTS "A" MODEL
S24-10619 CAP ASSEMBLY W/1½" SAE PAD 3000 PSI "B" MODEL
S24-10618 CAP ASSEMBLY W/SAE-20 THREADED PORTS "B" MODEL

ITEM	PART NUMBER	DESCRIPTION	QUANTITY
4	230-82002	Needle bearing BH 12	1
20	431-90600	⅜" socket pipe plug	2
21	S14-01257	Check valve	2
22	488-35022	¾ - 16 plug with "O" ring	1
23	034-70238"A"	End cap w/1½" SAE pad 3000 psi	1
	034-49752"A"	End cap w/SAE-20 threaded ports	1
	034-59696"B"	End cap w/1½" SAE pad 3000 psi	1
	034-59697"B"	End cap w/SAE-20 threaded ports	1

SPECIAL INSTRUCTIONS
"B" MODEL

1. **Replacing Cartridge Kit** - When necessary to change only the cartridge kit (cam ring, rotor, vanes and springs), an "A" Model cartridge kit made with an "A" Model cam ring may be used. No other change necessary.
2. **Changing Port Plates** - When necessary to change the cartridge kit, end cap and port plate, "B" Model parts **must** be used with the thicker tetraseal, (10, figure V) and Belleville washer (19) installed.
3. **Changing Cartridge Kit and End Cap** -When necessary to change only the cartridge kit and end cap the "B" Model cartridge and end cap **must** be used but the "A" Model port plate (8) can remain. In this case the "A" Model tetraseal (10) must be used.
   NOTE: When ordering parts the "A" or "B" Model must be designated.

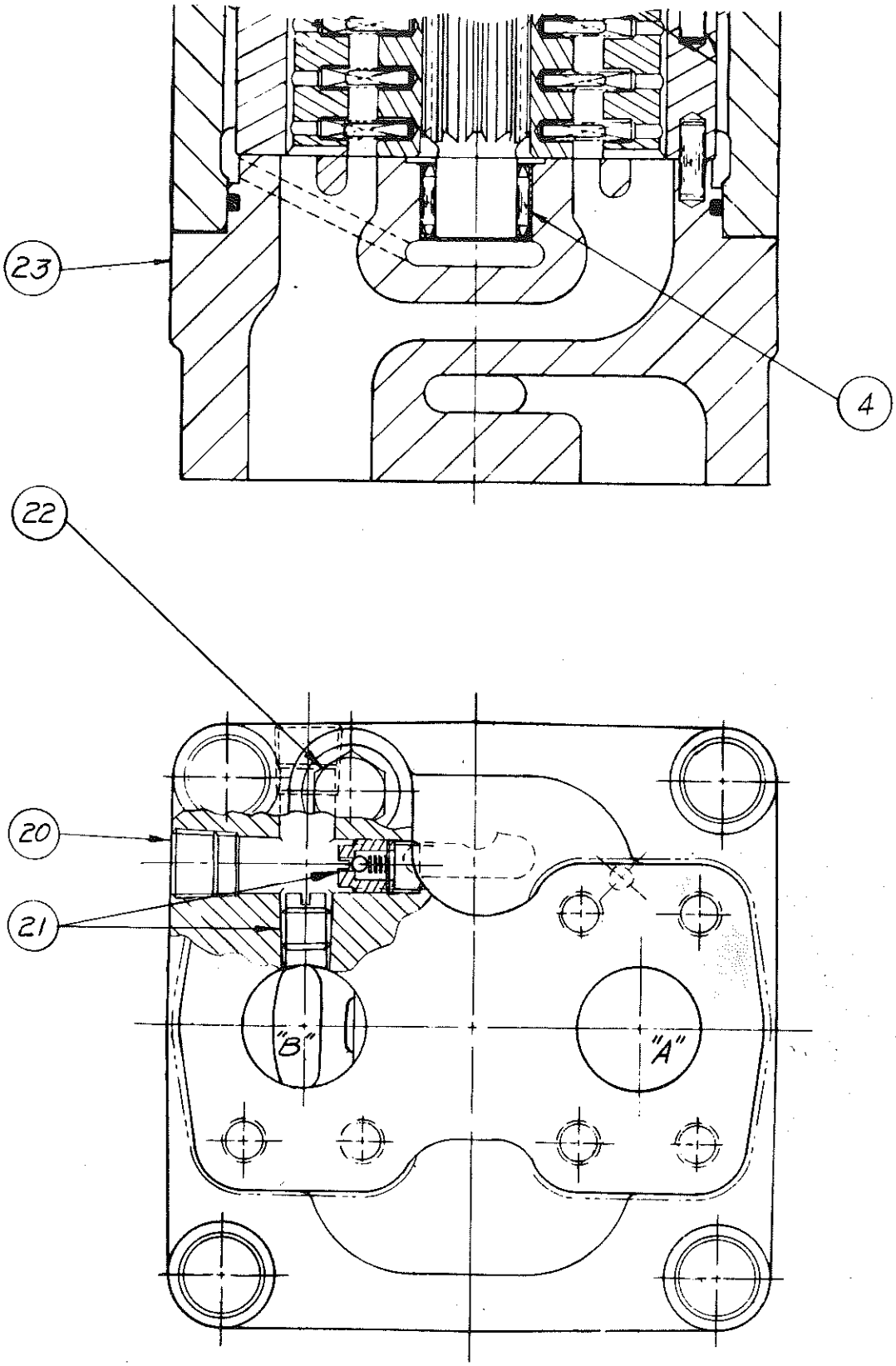

FIG. III
S14-28147 CAP ASSEMBLY

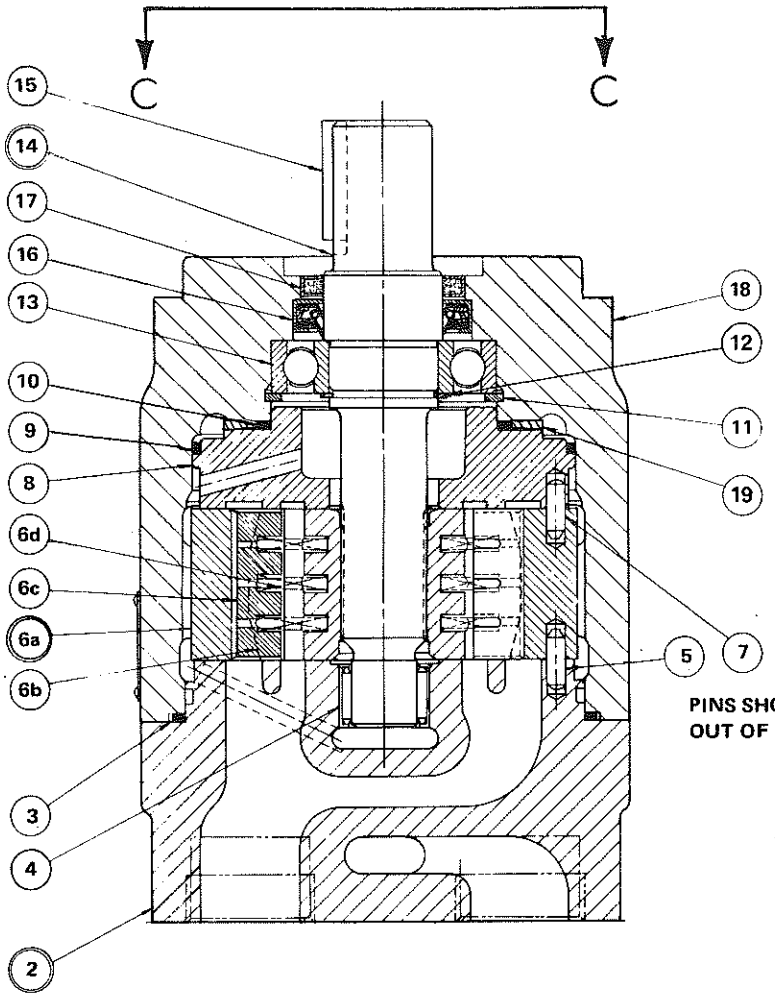

PINS SHOWN 45°
OUT OF POSITION

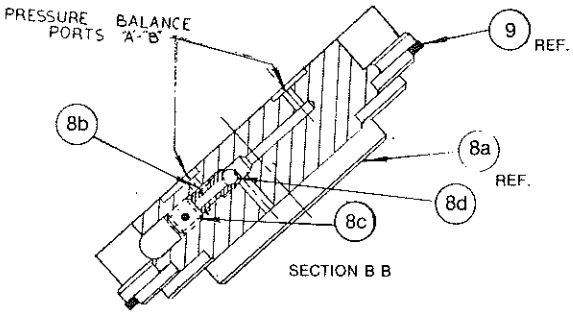

UNITS MANUFACTURED AFTER JAN 1, 1981

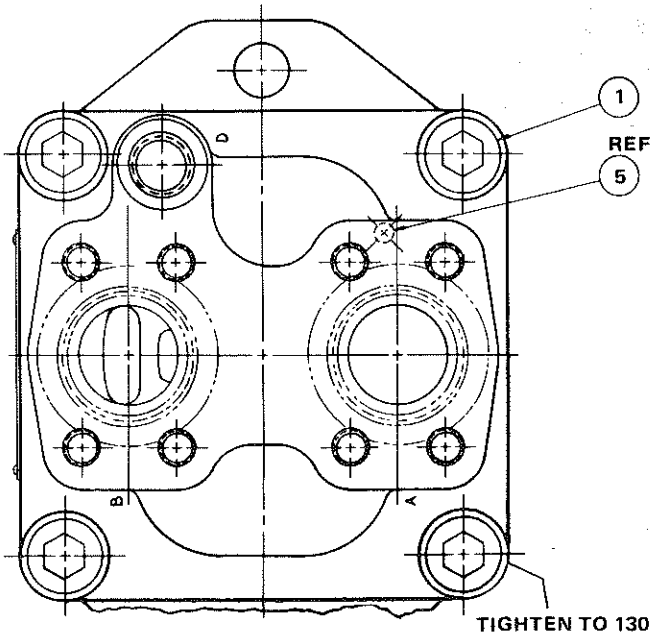

TIGHTEN TO 130 FT./LBS
4 BOLTS

FIG. IV

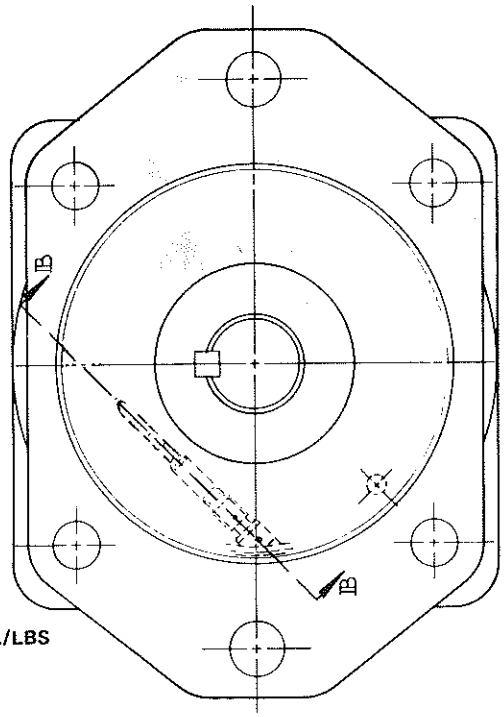

VIEW C-C

Model No. Key

Series M4D

M4D1-138-1 N 00 B 1 01

Motor Series and drain
- **M4D** — External drain
- **M4D1** — Internal drain
- **M4SD** — External drain
- **M4SD1** — Internal drain

Torque, theoretical

062	62 in #/100 psi
074	74 in. #/100 psi
088	88 in.# /100 psi
102	102 in.# /100 psi
113	113 in.# /100 psi
128	128 in.# /100 psi
138	138 in.# /100 psi

End Cap Options
- 01 — SAE-20 tap (1 5/8-12 UNF)
- 02 — Pad for SAE 4-bolt flanges

Seal Compound
- 1 — Buna-N
- 5 — Viton A

Design letter-assigned by mfr.

Standard porting — ports-in-line

Rotation — bidirectional

Shaft
- 1 — std. keyed
- 3 — std. splined

Dimensions

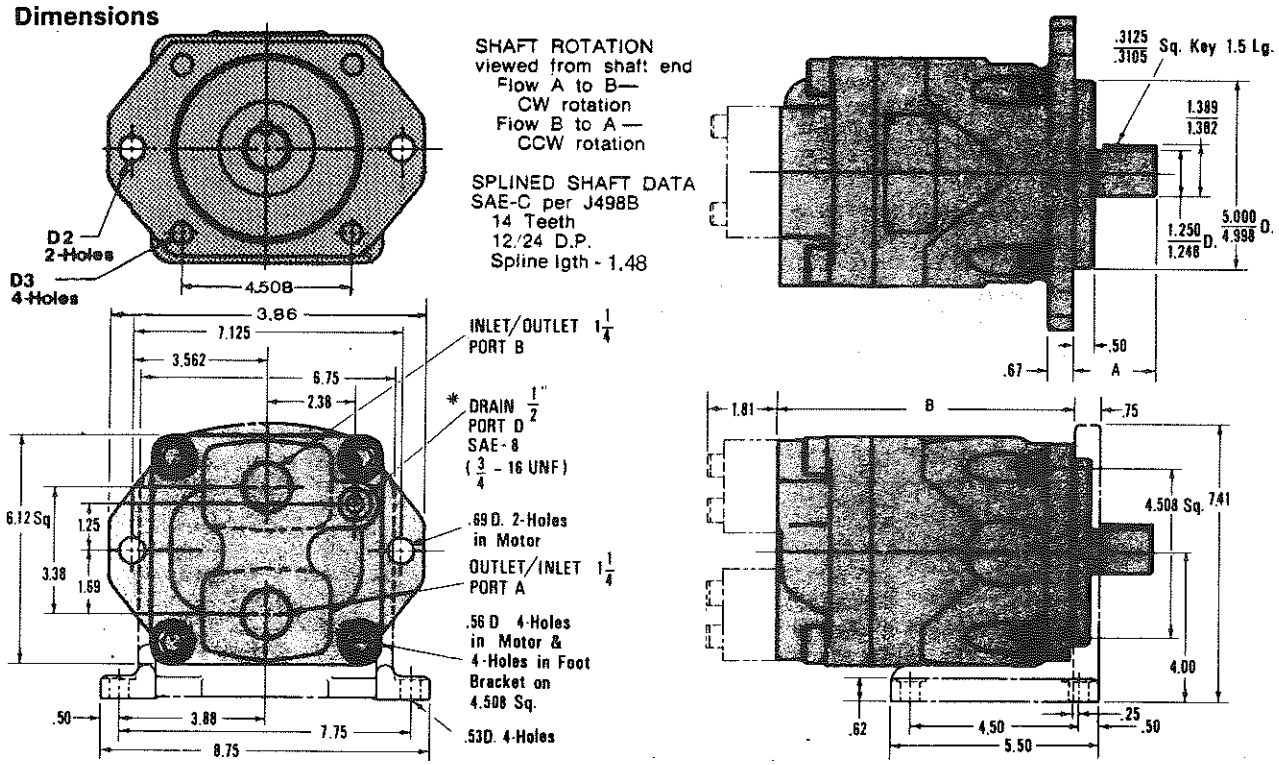

Installation Drawings
- SAE 4-bolt port pads — 23-7395-D
- SAE straight thread ports — 23-7396-D

Shafts		Dim.
Code	Description	A
1	Std. Keyed	2.19
3	Std. Splined	2.19

Body Length		Dim.
Code	Description	B
01	SAE Str. Thd.	8.00
02	Pad for 4-Bolt Connector	7.81

*Drain port is plugged in M4D1 and M4SD1 motors

M4D PARTS LIST

ITEM	QTY.	PART NUMBER	DESCRIPTION
1	4	358-24300	Socket head cap screw, ⅝-11x2¾"
2	1	**034-49753"A"** 034-59695"B"	End cap, external drain, str. thread
	1	**034-70237"A"** 034-59694"B"	End cap, external drain, SAE 4-bolt
3	1	691-10250*	Square Section seal #250
4	1	230-82002	Needle bearing BH-1212
5	1	**324-22414 "B"** 324-21612 "A"	**Dowel pin ⅜"x⅞"** Dowel pin ¼"x¾"
6	1	See below	Cartridge assembly
7	1	324-21612	Dowel pin ¼"x¾"
8	1	S14-26066"A" S24-10905"B"	Front port plate assembly
8a	1	034-53343"A" 034-59852"B"	Front port plate
8b	1	034-53346	Valve adaptor
8c	1	312-35056	Setscrew ⅜-24xUNFx⅜"
8d	1	201-06001	Chrome ball 3/16" dia.
9	1	691-00246*	O-ring
10	1	691-10232"A" 691-10335"B"*	Square section seal
11	1	356-32283	Internal snap ring
12	1	034-70853	External snap ring
13	1	230-00207	Shaft ball bearing
14	1	034-70982	#1 shaft with 5/16" keyway
	1	034-70983	#3 shaft with 14 tooth spline
15	1	034-49676	Shaft key for 034-70982
16	1	637-00003*	Shaft seal
17	1	605-10020*	Felt wiper
19	1	034-59843"B"	Belleville washer
	1	S14-26720	#1 Shaft assembly (12, 13, 14, 15)
	1	S14-26721	#3 Shaft assembly (12, 13, 14)
	1	S24-10916*	M4D Seal kit
	1	S24-10916-5**	M4SD Seal kit

STANDARD M4D CARTRIDGE ASSEMBLY

UNIT MODEL NO.	ITEM 6 CARTRIDGE ASSEMBLY "A" Model	"B" Model	THESE PARTS ARE A COMPLETE CAM RING ASSEMBLY 6a "A" Mod. CAM RING	6a "B" Mod. CAM RING	6b ROTOR	6c VANES	6d VANE SPRINGS
M4D or M4D1-062	S14-29863	S24-10620	034-70730	034-59680			
M4D or M4D1-074	S14-26710	S24-10621	034-49748	034-59681			
M4D or M4D1-088	S14-28764	S24-10622	034-70320	034-59682			
M4D or M4D1-102	S14-26711	S24-10623	034-49749	034-59683	034-49747	034-49746	034-49743
M4D or M4D1-113	S14-26712	S24-10624	034-49750	034-59684			
M4D or M4D1-128	S14-26713	S24-10625	034-49751	034-59685			
M4D or M4D1-138	S14-26714	S24-10626	034-43760	034-59686			
Quantity Per Unit			1	1	1	10	30

M4SD CARTRIDGE ASSEMBLY

UNIT MODEL NO.	ITEM 6 CARTRIDGE ASSEMBLY "A" Model	"B" Model	THESE PARTS ARE A COMPLETE CAM RING ASSEMBLY 6a "A" Mod. CAM RING	6a "B" Mod. CAM RING	6b ROTOR	6c VANES	6d VANE SPRINGS
M4SD or M4SD1-062	S14-29865	S24-10627	039-70731	034-59687			
M4SD or M4SD1-074	S14-26715	S24-10628	034-49782	034-59688			
M4SD or M4SD1-088	S14-28787	S24-10629	034-70339	034-59689			
M4SD or M4SD1-102	S14-26716	S24-10630	034-49783	034-59690	034-49747	034-49746	034-49743
M4SD or M4SD1-113	S14-26717	S24-10631	034-49784	034-59691			
M4SD or M4SD1-128	S14-26718	S24-10632	034-49785	034-59692			
M4SD or M4SD1-138	S14-26719	S24-10633	034-49786	034-59693			
Quantity Per Unit			1	1	1	10	30

*For use with petroleum base fluids.
**For M4SD add—5 to model no. and code no. when ordering a kit. Change seal prefix to 675 or 695 when ordering seals separately.

Note: Item 18 Housing 034-49756

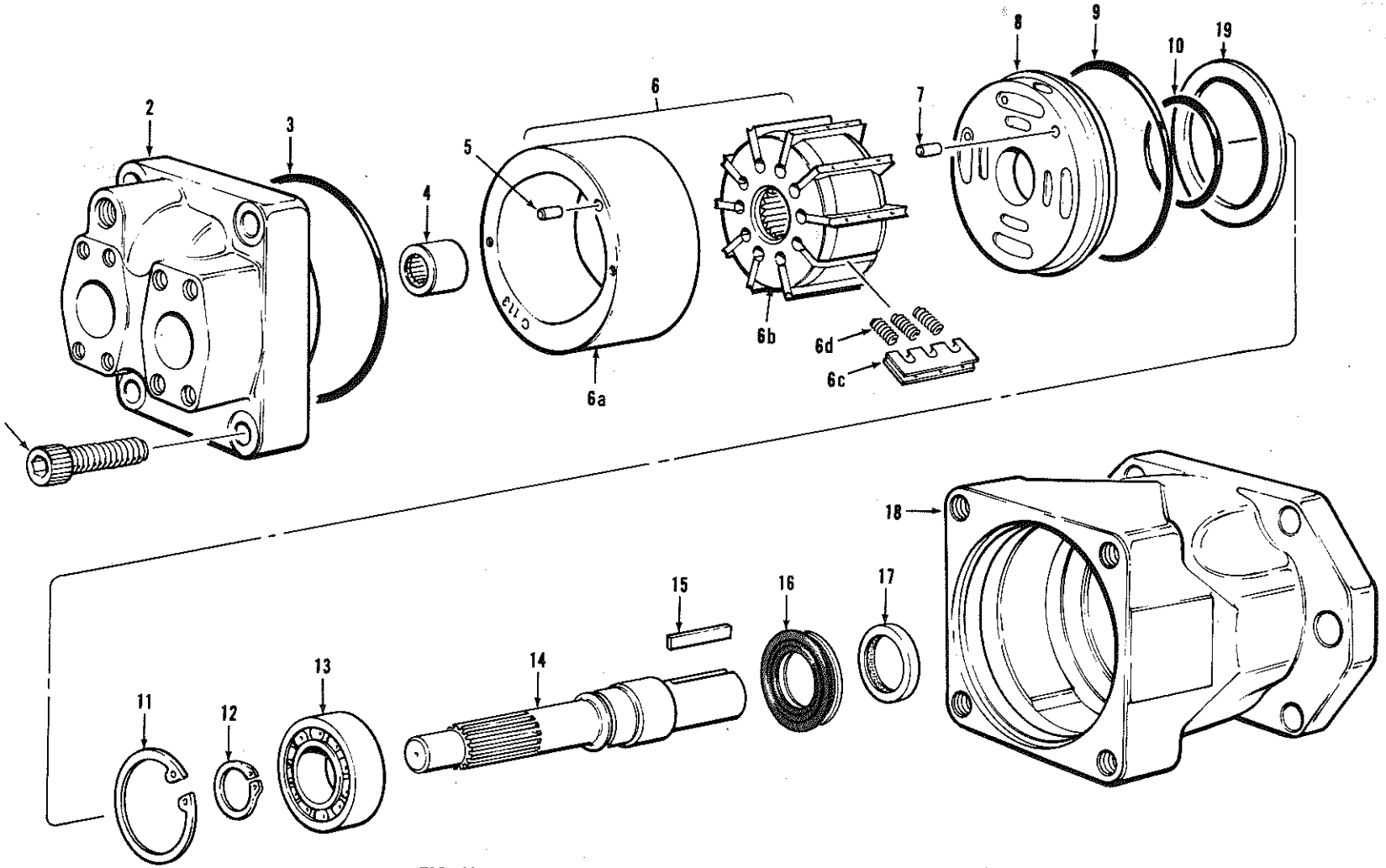

FIG. V

"Hägglunds Denison Worldwide"

GENERAL SALES OFFICES

CALIFORNIA
San Jose 95118 (408) 723-5486
4340 Almaden Expressway
Suite 140

Orange 92668 (714) 634-9565
1940 W. Orangewood Ave.
Suite 209

DELAWARE
Newark 19711 (302) 731-0232
2644 Capitol Trail
Suite N

GEORGIA
Peachtree City 30269 (404) 487-1399
110 Lakeaires

Atlanta 30342 (404) 257-1504
5775 Peachtree-Dunwoody Rd.
Suite 460

ILLINOIS
Arlington Heights 60005 (312) 640-6630
717 W. Algonquin Rd.

MASSACHUSETTS
Walpole 02081 (617) 668-9238
1600 Boston Providence Highway
Suite 211

NEW JERSEY
Montvale 07645 (201) 391-8930
50 Chestnut Ridge Rd.

NORTH CAROLINA
Charlotte 28212 (704) 545-8390
4400 Morris Park Dr.
Suite M

OHIO
Cincinnati 45241 (513) 779-4825
9624 Cincinnati-Columbus Rd.
Suite 303

Columbus 43216 (614) 481-7300
1220 Dublin Road

PENNSYLVANIA
Allentown 18104 (215) 395-4050
1483 Cedarwood Road

TEXAS
Richardson 75081 (214) 690-9600
801 E. Campbell Rd.
Suite 270

Houston 77070 (713) 894-8743
12777 Jones Rd.
Suite 175-11/12

WASHINGTON
Seattle 98188 (206) 575-3070
331 Andover Park West

WISCONSIN
Waukesha 53186 (414) 547-9159
West 255 N. 499 Grandview Blvd. N.

CANADA
Hägglunds Denison Canada Inc.
Calgary, AB (403) 269-2969
125 - 9th Avenue S.E., Suite 310,
One Palliser Square
T2G 0P6

Vancouver, BC (604) 734-2263
2015 West 12th Avenue
V6J 2G3

Mississauga, ON (416) 858-2250
6675-1 Millcreek Dr. or
L5N 5M4 (416) 738-0561

CUSTOMER SERVICE
Delaware, OH 43015
425 S. Sandusky St.
Service (614) 481-4224
Parts (614) 481-7300
Emergency Service (614) 265-9333
(after hours only)

Sales Representatives and Distributors Located in Major Industrial Areas — Look for "Hägglunds Denison Hydraulic Equipment" in the Yellow Pages.

INTERNATIONAL AFFILIATES LOCATED IN — Argentina, Australia, Austria, Belgium, Brazil, Canada, Chile, Colombia, Denmark, Eastern Europe, England, Finland, France, Germany, Greece, Holland, Hong Kong, Italy, Japan, Mexico, New Zealand, Norway, Peru, Singapore, South Africa, Spain, Sweden, Switzerland, Venezuela.

HÄGGLUNDS DENISON

MEMBER OF THE ASEA-GROUP

HÄGGLUNDS DENISON CORPORATION
1220 Dublin Road, Columbus, Ohio U.S.A. 43216
Call 1-800-982-0030 for the Distributor nearest you

PRINT DATE
2/88

Printed in U.S.A.