Effective: April 2018
Supersedes: HY25-1FRD-M1/US February 2018
HY25-1FRD-M1/US Supplement 272F May 2017

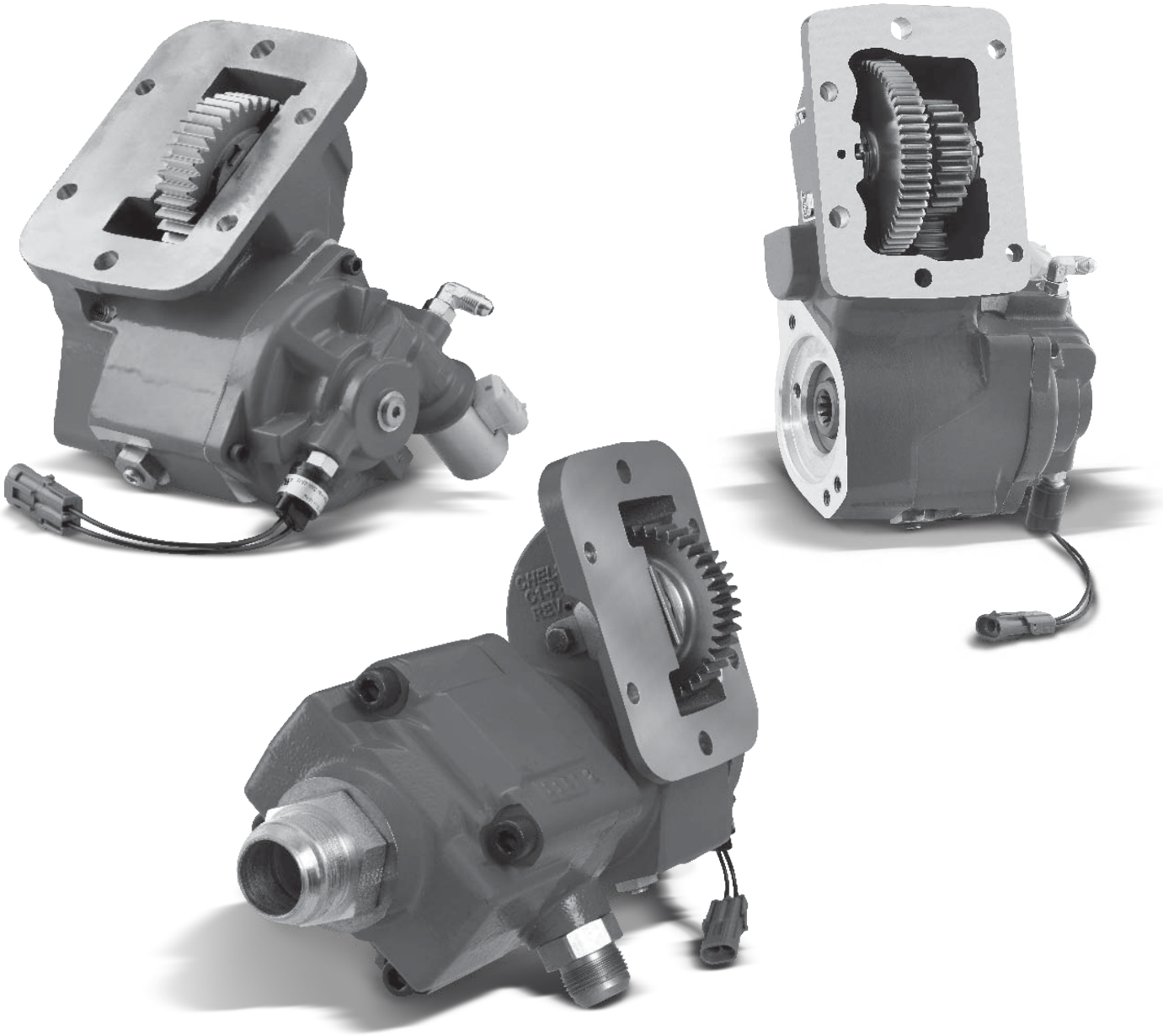

Power Take-Offs Owner's Manual

Ford "F" Series

247, 249, 249V, 272-FORD Series

Parker Chelsea

ENGINEERING YOUR SUCCESS.

⚠ WARNING — User Responsibility

FAILURE OR IMPROPER SELECTION OR IMPROPER USE OF THE PRODUCTS DESCRIBED HEREIN OR RELATED ITEMS CAN CAUSE DEATH, PERSONAL INJURY AND PROPERTY DAMAGE.

This document and other information from Parker Hannifin Corporation, its subsidiaries and authorized distributors provide product or system options for further investigation by users having technical expertise.

The user, through its own analysis and testing, is solely responsible for making the final selection of the system and components and assuring that all performance, endurance, maintenance, safety and warning requirements of the application are met. The user must analyze all aspects of the application, follow applicable industry standards, and follow the information concerning the product in the MY2017 product catalog and in any other materials provided from Parker or its subsidiaries or authorized distributors.

To the extent that Parker or its subsidiaries or authorized distributors provide component or system options based upon data or specifications provided by the user, the user is responsible for determining that such data and specifications are suitable and sufficient for all applications and reasonably foreseeable uses of the components or systems.

Offer of Sale

The items described in this document are hereby offered for sale by Parker Hannifin Corporation, its subsidiaries or its authorized distributors. This offer and its acceptance are governed by the provisions stated in the “Offer of Sale”.

Patent Information

The Chelsea® Power Take-Off or its components shipped with this owner’s manual may be manufactured under one or more of the following U.S. patents:
7,159,701 7,007,565 6,962,093 1,326,036 60,321,840.7 9,494,227 B2
Other patents pending.

Contents

Continued on Next Page

Parker Chelsea
Parker Hannifin Corporation
Chelsea Products Division
Olive Branch, MS 38654 USA

Parker Chelsea
Parker Hannifin Corporation
Chelsea Products Division
Olive Branch, MS 38654 USA

Foreword

This booklet will provide you with information on correct installation of Chelsea® Power Take-Offs (PTOs). Proper installation and set up procedures will help you get additional and more profitable miles from your truck equipment and components.

It is important that you be sure that you are getting the right transmission/PTO combination when you order a new truck. An inadequate transmission will overwork any PTO in a short period of time. In addition, a mismatched transmission and PTO combination can result in unsatisfactory performance of your auxiliary power system from the start.

If you have questions regarding correct PTO and transmission combination, please contact your local Chelsea® Auxiliary Power Specialist. They can help you select the properly matched components to ensure correct and efficient applications.

Safety Information

These instructions are intended for the safety of the installer, operator & supporting personnel. Read them carefully until you understand them.

General Safety Information

To prevent injury to yourself and/or damage to the equipment:

- Read carefully all owner's manuals, service manuals, and/or other instructions.
- Always follow proper procedures, and use proper tools and safety equipment.
- Be sure to receive proper training.
- Never work alone while under a vehicle or while repairing or maintaining equipment.
- Always use proper components in applications for which they are approved.
- Be sure to assemble components properly.
- Never use worn-out or damaged components.
- Always block any raised or moving device that may injure a person working on or under a vehicle.
- Never operate the controls of the Power Take-Off or other driven equipment from any position that could result in getting caught in the moving machinery.

Proper Matching of PTO

WARNING: A Power Take-Off must be properly matched to the vehicle transmission and to the auxiliary equipment being powered. An improperly matched Power Take-Off could cause severe damage to the vehicle transmission, the auxiliary driveshaft, and/or to the auxiliary equipment being powered. **Damaged components or equipment could malfunction causing serious personal injury to the vehicle operator or to others nearby.**

To avoid personal injury and/or equipment damage:

- Always refer to Chelsea catalogs, literature, and owner's manuals and follow Chelsea recommendations when selecting, installing, repairing, or operating a Power Take-Off.
- Never attempt to use a Power Take-Off not specifically recommended by Chelsea for the vehicle transmission.
- Always match the Power Take-Off's specified output capabilities to the requirements of the equipment to be powered.
- Never use a Power Take-Off whose range of speed could exceed the maximum.

This symbol warns of possible personal injury.

Parker Chelsea

Parker Hannifin Corporation
Chelsea Products Division
Olive Branch, MS 38654 USA

Safety Information (Continued)
Cold Weather Operation of PowerShift PTO

WARNING: During extreme cold weather operation [32°F (0°C) and lower], a disengaged PowerShift Power Take-Off can momentarily transmit high torque that will cause unexpected output shaft rotation. This is caused by the high viscosity of the transmission oil when it is extremely cold. As slippage occurs between the Power Take-Off clutch plates, the oil will rapidly heat up and the viscous drag will quickly decrease.

The Power Take-Off output shaft rotation could cause unexpected movement of the driven equipment resulting in serious personal injury, death, or equipment damage.

To avoid personal injury or equipment damage:

- Driven equipment must have separate controls.
- The driven equipment must be left in the disengaged position when not in operation.
- Do not operate the driven equipment until the vehicle is allowed to warm up.

Rotating Auxiliary Driveshafts

WARNING:

- Rotating auxiliary driveshafts are dangerous. You can snag clothes, skin, hair, hands, etc. This can cause serious injury or death.
- Do not go under the vehicle when the engine is running.
- Do not work on or near an exposed shaft when the engine is running.
- Shut off the engine before working on the Power Take-Off or driven equipment.
- Exposed rotating driveshafts must be guarded.

Guarding Auxiliary Driveshafts

WARNING: We strongly recommend that a Power Take-Off and a directly mounted pump be used to eliminate the auxiliary driveshaft whenever possible. If an auxiliary driveshaft is used and remains exposed after installation, it is the responsibility of the vehicle designer and PTO installer to install a guard.

Using Set Screws

WARNING: Auxiliary driveshafts may be installed with either recessed or protruding set screws. If you choose a square head set screw, you should be aware that it will protrude above the hub of the yoke and may be a point where clothes, skin, hair, hands, etc. could be snagged. A socket head set screw, which may not protrude above the hub of the yoke, does not permit the same amount of torquing as does a square head set screw. Also, a square head set screw, if used with a lock wire, will prevent loosening of the screw caused by vibration. Regardless of the choice made with respect to a set screw, an exposed rotating auxiliary driveshaft must be guarded.

Important: Safety Information and Owner's Manual

Chelsea Power Take-Offs are packaged with safety information decals, instructions, and an owner's manual. These items are located in the envelope with the PTO mounting gaskets. Also, safety information and installation instructions are packaged with some individual parts and kits. **Be sure to read the owner's manual before installing or operating the PTO** Always install the safety information decals according to the instructions provided. Place the owner's manual in the vehicle glove compartment.

This symbol warns of possible personal injury.

Safety Information (Continued)

WARNING: Operating the PTO with the Vehicle in Motion

Some Power Take-Offs may be operated when the vehicle is in motion. To do so, the PTO must have been properly selected to operate at highway speeds and correctly matched to the vehicle transmission and the requirements of the driven equipment.

If in doubt about the PTO specifications and capabilities, avoid operating the PTO when the vehicle is in motion. Improper application and/or operation can cause serious personal injury or premature failure of the vehicle, the driven equipment, and/or the PTO.

Always remember to disengage the PTO when the driven equipment is not in operation.

Chelsea PTO Safety Label Instructions

1. The two black and orange on white 5" x 7" pressure sensitive vinyl labels, part number 379274, must be placed on the vehicle frame rails (one (1) on each side), in a position that would be **HIGHLY** visible to anyone that would go under the truck near the PTO rotating shaft. If the vehicle is to be painted after these labels are installed, cover them with two (2) blank masking covers. Remove the masking covers after painting.
2. Place the one (1) black and orange on white 3.5" x 5" pressure sensitive vinyl label, part number 379275, on the visor nearest the operator of the vehicle, this must be placed near the PTO visor label.
3. Place the one (1) red and white with black lettering 3.5" x 7.5" pressure sensitive vinyl label, part number 379915, on the opposite side of the visor from the above label part number 379275.
4. Place the one (1) white and black heavy duty card, part number 379276, in the vehicle glove box in a position highly visible to the operator. For example, try to place this card on top of whatever may be in the glove box.

If you require labels, please order part number 328946X at no charge from your local Chelsea Warehouse or send request direct to:

Parker Hannifin Corporation
Chelsea Products Division
8225 Hacks Cross Road
Olive Branch, MS 38654
Customer Service: (662) 895-1011

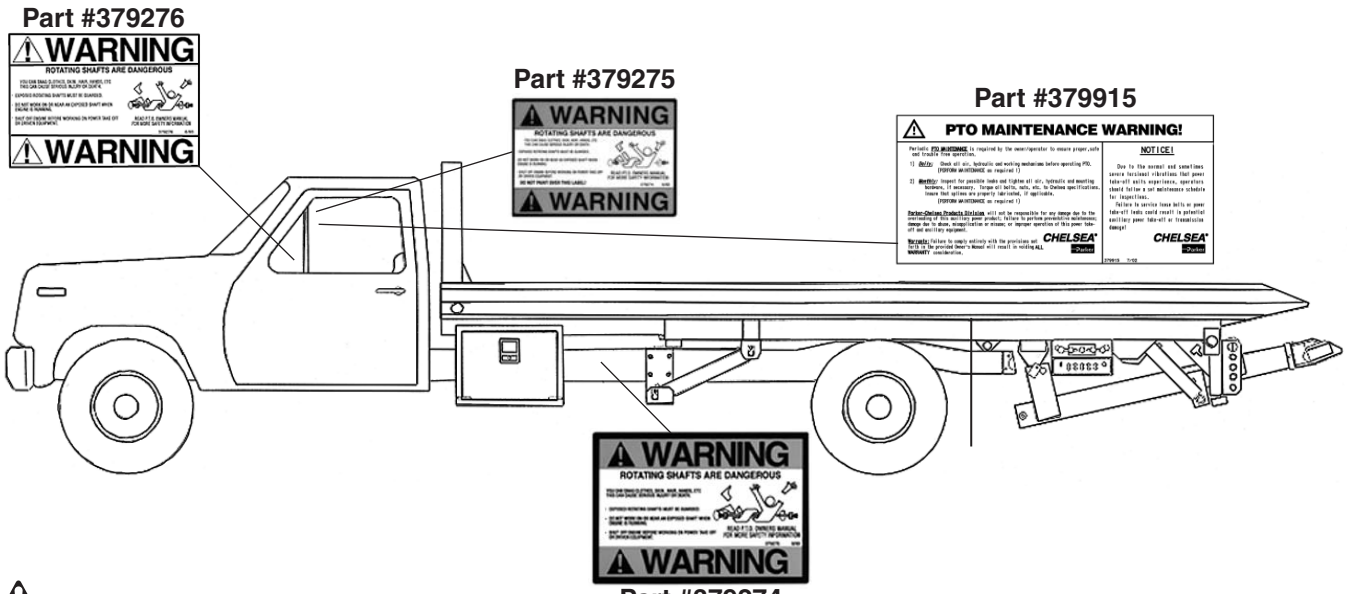

This symbol warns of possible personal injury.

Direct Mount Pump Support Requirements (Universal)

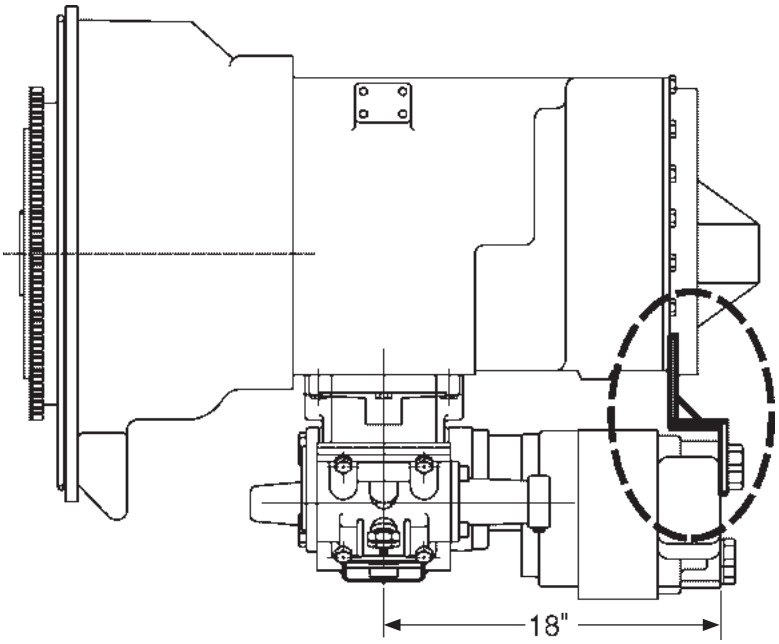

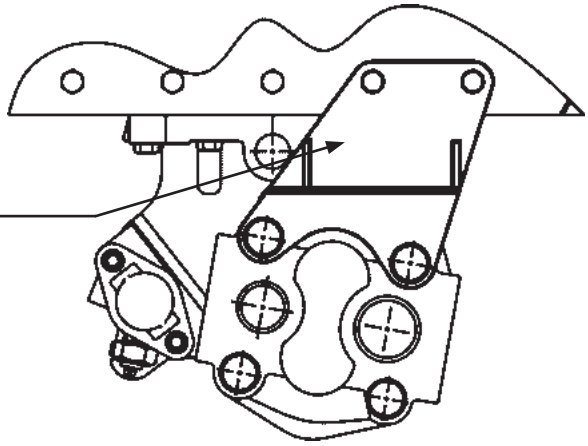

NOTE:
For Proper Bracketing, Attach at 2 or More Transmission Bolt Locations and 2 or More Pump Locations. Contact Transmission Manufacturer for Proper Bracket Mounting Locations.

⚠ Use CAUTION to ensure the support bracket does not pre-load pump / PTO mounting. When mounting the pump, it should be fully supported by a jack until the support bracket is secured in place, then the jack can be released. This will make sure the PTO is not being stressed by the bracket.

Chelsea requires the use of pump supports (Support Brackets) in all applications to ensure the Maximum Bending Moment (MBM) of the PTO / Pump assembly is not exceeded. Exceeding the MBM can result in damage to PTO, transmission, driven equipment, and / or personnel. It is the responsibility of the installer to ensure that adequate support is implemented. All applications are unique and it is important to consider all parameters in designing a proper support bracket.

PTO warranty will be void if a pump bracket is not used when one of the following conditions are present:

1. The combined weight of pump, fittings and hose exceed 40 pounds [18.14 kg].
2. The combined length of the PTO and pump is 18 inches [45.72 cm] or more from the PTO centerline to the end of the pump.

ALSO: Remember to pack the female PTO shaft with grease before installing the pump on the PTO (reference Chelsea grease pack 379688).

⚠ This symbol warns of possible personal injury.

Function of Auxiliary Power Shafts

An auxiliary power shaft transmits torque from the power source to the driven accessory. The shaft must be capable of transmitting the maximum torque and RPM required of the accessory, plus any shock loads that develop.

An auxiliary power shaft operates through constantly relative angles between the power source and the driven accessory, therefore, the length of the auxiliary power shaft must be capable of changing while transmitting torque. This length change, commonly called "slip movement", is caused by movement of the power train due to torque reactions and chassis deflections.

Joint operating angles are very important in an auxiliary power joint application. In many cases, the longevity of a joint is dependent on the operating angles. (See chart below)

This information is limited to 1000 through 1310 series applications. For applications requiring a series larger than 1310, contact your local Chelsea distributor.

Determining Shaft Type

1. Solid or tubular?
   a. In applications requiring more than 1000 RPM or where the application necessitates a highly balanced auxiliary power shaft, a tubular shaft should be used.
   b. Spicer's solid shafting auxiliary power joints are designed for 1000 or less RPM intermittent service such as:

      Driving small hydraulic pumps

      Driving winches

      Driving low speed product pumps

2. Joint Series should be determined using the chart on the following page.

SPICER® UNIVERSAL JOINT OPERATING ANGLES			
Prop. Shaft RPM	**Max. Normal Operating Angle**	**Prop. Shaft RPM**	**Max. Normal Operating Angle**
3000	5° 50'	1500	11° 30'
2500	7° 00'	1000	11° 30'
2000	8° 40'	500	11° 30'
Above based on angular acceleration of 100 RAD/SEC^2			

Parker Chelsea
Parker Hannifin Corporation
Chelsea Products Division
Olive Branch, MS 38654 USA

Spicer® Universal Joint Engineering Data

Joint Series	**1000**	**1100**	**1280**	**1310**
Torque Rating				
Automotive (Gas or Diesel Engine) lbs-ft Continuous	50	54	95	130
Tubing				
Diameter	1.750"	1.250"	2.500"	3.00"
Wall Thickness	.065"	.095"	.083"	.083'
W = Welded S = Seamless	W	S	W	W
Flange Diameter (Swing Diameter)				
Rectangular Type	3.500"	3.500"	3.875"	3.875"
Bolt Holes - Flange Yoke				
Circle	2.750"	2.750"	3.125"	3.125"
Diameter	.312"	.312"	.375"	.375"
Number	4	4	4	4
Male Pilot Dia.	2.250"	2.250"	2.375"	2.375"
Distance Across Lugs				
Snap Ring	2.188"	2.656"	3.469"	3.469"
Construction	2.188"	2.656"	3.469"	3.469"
Bearing Diameter	.938"	.938"	1.062"	1.062"

Maximum Operating Speed * By Tube Size, Solid Shaft Size, and Length
***(For speed below 500 RPM or over 2500 RPM, contact your Chelsea Distributor)**

Tubing Dia. & Wall Thickness Joint & Shaft (W=Welded S=Seamless)	Max. Installed Length in Inches for Given RPM Centerline to Centerline of Joints for a Two Joint Assembly or Centerline of Joint to Centerline of Center Bearing for a Joint & Shaft RPM - Revolutions per Minute				
	500	**1000**	**1500**	**2000**	**2500**
1.750" x .065" W	117"	82"	67"	58"	52"
1.250" x .095" S	91"	64"	52"	45"	40"
2.500" x .083" W	122"	87"	70"	62"	55"
3.000" x .083" W	-	-	-	85"	76"
Solid Shaft Diameter					
.750"	60"	42"	35"	30"	27"
.812"	62"	44"	36"	31"	28"
.875"	65"	46"	37"	32"	29"
1.000"	69"	49"	40"	35"	31"
1.250"	77"	55"	45"	39"	35"

TorqShift® 5R110 Transmission – Stationary Elevated Idle Control (SEIC) 6.7L Diesel and 6.8L Gas

Models Affected
Super Duty – MY2009-MY2016
Medium Duty – MY2009-MY2010

Overview

SEIC

- A Powertrain Control Module (PCM) strategy that provides elevated engine speed to drive auxiliary commercial equipment such as hydraulic pumps, generators, air compressors; or maintain vehicle battery charge under extreme electrical demands.

SEIC Enable/Disable Conditions

Vehicle Conditions to Enable SEIC (all are required)	Vehicle Conditions that Disable SEIC (any one required)	SEIC	Mobile Mode
Parking brake applied.	Parking brake disengaged.	Yes	No
Foot off of service brake	Depressing service brake	Yes (1)	No (2)
Vehicle in PARK (automatic trans.)	Vehicle taken out of PARK	Yes	No
Foot off of accelerator pedal	Accelerator pedal depressed	Yes	No
Vehicle speed is 0 mph (stationary)	Vehicle speed is not 0 mph (stationary)	Yes	No
Brake lights functional	Brake light circuit disconnected	Yes	Yes
Engine at a stable base idle speed		Yes	No
Transmission oil Temp above 20°F	Transmission Oil Temperature (TOT) Limit exceeds 240°F on Diesel and 250°F on Gas	Yes	Yes
Eng Coolant Temp above 20°F (3)	Engine Coolant Temperature (ECT) above 234°F	No	Yes
Eng Coolant Temp above 140°F	Engine Coolant Temperature (ECT) above 220°F	Yes (1)	No
	Catalyst Temperature Limit	Yes	Yes

(1) A "Change-of-State" at the "PTO-Request" circuit is required to re-invoke SEIC. When a disabler is seen by the PCM, the "PTO-Indicator" circuit changes from "Ground-Source" to an "Open-Circuit". After approximately 3 seconds SEIC drops out, returning the engine speed to base idle. For vehicle-stationary operation, the automatic transmission torque converter unlocks as engine speed proceeds below 1200 RPM. To re-initiate SEIC the operator must turn off the aftermarket PTO switch (removing command voltage to the "PTO-Mode" circuit) and then turn it back on again.
(2) SEIC is automatically re-activated after approximately 3 seconds after the disabling condition is removed.
(3) MY2013 Gas Engine Applications Engine Coolant Temperature above 30°F.

Reference Ford Body Builder website for year specific information at https://www.fleet.ford.com/truckbbas/

Parker Chelsea
Parker Hannifin Corporation
Chelsea Products Division
Olive Branch, MS 38654 USA

TorqShift® 5R110 Transmission – Stationary Elevated Idle Control (SEIC) (Continued) 6.7L Diesel and 6.8L Gas

Models Affected
Super Duty – MY2009-MY2016
Medium Duty – MY2009-MY2010

General System Behavior

- To guarantee full advertised torque capability at the automatic transmission PTO gear and through the aftermarket PTO clutch, the transmission torque converter must be locked, and the hydraulic line pressure serving the aftermarket PTO clutch must be elevated. Applying battery voltage to the PTO circuit is the signal to the transmission to enter SEIC strategy and command these two important functions. This applies to both stationary and mobile PTO operations.

- If an SEIC disabler occurs:
  - GAS engines will require a "change-of-state", meaning the operator is required to turn off voltage to the "PTO-Request" circuit, and back on again to re-invoke SEIC and PTO operation.
  - DIESEL engines do not require a "change-of-state" at the "PTO" circuit. Once the disabling condition is removed, the strategy re-invokes SEIC after approximately 3 seconds, automatically returning the engine speed back to what was commanded by the operator prior to the disabling condition.

- Battery Charge Protection (BCP): A diesel-only function. When it is switched on the engine speed goes immediately to 1200 RPM, and stays there even if the battery is fully charged. From this state it uses system voltage as well as ambient air temp., engine oil temperature information to raise engine speed higher to maintain a certain battery charge. Maximum engine speed in BCP mode is 2400 RPM The BCPSW circuit may be wired to circuit to Ignition-Hot-in-Run to make it "automatic" for ambulance. Park-Brake-Set is one of the enablers of BCP.

- The Transmission Control Module (TCM) will turn off the PTO system when Transmission Oil Temperature (TOT) reaches 240°F on Diesel and 250°F on Gas.

- SEIC/PTO strategy function in the PCM is not affected by the loss of vehicle battery electrical power.

- SEIC Ramp Rate (fixed, not programmable):
  - GAS engines: 400 RPM / second.
  - DIESEL engines: When first applying battery voltage to the PTO circuit the PCM directs the engine to go to the initial target that it sees at the RPM circuit at 200 RPM / second (1200 RPM if there is no resistor in the RPM circuit – open circuit). If resistance is subsequently changed at the RPM circuit then the ramp rate to this second speed target is virtually instantaneous (as fast as the diesel engine can get there).

- Correlation between engine speed and resistor values:
  - The external voltage source that the aftermarket PTO system designer uses to command SEIC through the "PTO" or "PTO-Request" circuits must be the same as that used by the PCM internally for predictable SEIC function. Reasoning is that a fully-charged vehicle battery fluctuates with ambient temperature.
  - The correlation will be better for diesel engines since the diesel engine SEIC system offers buffered PCM voltage and ground circuits to complete the resistor circuits for engine speed, while the gas engine system forces the SEIC circuit installer to use chassis voltage and ground.

TorqShift® 5R110 Transmission – Stationary Elevated Idle Control (SEIC) (Continued) 6.7L Diesel and 6.8L Gas

Models Affected
Super Duty – MY2009-MY2016
Medium Duty – MY2009-MY2010

General System Behavior (Continued)

- Correlation between engine speed and resistor values (Continued):
  - If there is a high electrical demand on the chassis battery, such as from aftermarket inverters or generators, etc., the actual elevated idle engine speed may vary with that demand for any given resistance in the SEIC circuit. More so for gas engine systems than diesel since gas engine uses chassis battery voltage as a reference.

- GAS Engine Only:
  - Normal base engine calibration allows approximately +/-50 RPM fluctuation. If any factory vehicle accessories are used during SEIC, e.g. a/c, defroster, etc., then that fluctuation may increase to approximately +/-100 RPM or more.
  - The sudden loss of aftermarket PTO hydraulic pressure during SEIC/PTO operation, like a ruptured hose, may send SEIC engine speed to near 3000 RPM It is recommended that a hydraulic pressure switch linked to SEIC/PTO be added to disable SEIC/PTO when a hose ruptures.
  - Because of a service brake circuit characteristic at engine-start, invoking SEIC may cause the diagnostic error code FFG_BOO to get flagged (recorded in the PCM). To avoid this, simply tap the service brake pedal sometime after engine-start and prior to invoking SEIC. Once the code is set, SEIC may not be available until it is erased.
  - Gas engines require a "change-of-state" at the PTO-Mode and PTO-Engage circuits whenever a disabler turns off SEIC (remove battery voltage signal and re-apply).
  - For aftermarket remote engine start-stop: a change-of-state is required to get SEIC to function again.

Special Situations

Mobile PTO Operation (TorqShift® Automatic or M6 manual Transmission)
Always apply battery voltage to the PTO wire to keep SEIC active. Engine speed is no longer commanded by SEIC, instead it is controlled by the foot throttle. The increased line pressure and torque converter commands must remain active to protect the automatic transmission. Convert PTO solenoid power to direct-battery instead of through the SEIC circuit suggested in this bulletin, possibly using the VSO signal circuit. A slightly harsher automatic transmission shift can be expected but is harmless.

Alternative Calibration
All new Ford light trucks have an "Alternative Calibration" or ALT-CAL installed in the PCM that conditions the powertrain during its early lifetime. It may increase the PARK-idle or drive-idle speed of the engine, by as small as 50 RPM or by several hundred. It affects SEIC initiation by not letting it activate, because one of the SEIC enablers is having a steady, base, idle speed, generally near 650 RPM If ALT-CAL sets the idle at 700 RPM then SEIC activation will be prevented. ALT-CAL is normally removed after 50 key-on starts, or by driving over 5 continuous miles; it is also sometimes erased by disconnecting the battery for a minute or so.

TorqShift® 6R140 Transmission – Stationary Elevated Idle Control (SEIC) 6.7L Diesel

Models Affected
Super Duty – MY2011-MY2018
Medium Duty – MY2016-MY2018

Overview

SEIC

- A Powertrain Control Module (PCM) strategy that provides elevated engine speed to drive auxiliary commercial equipment such as hydraulic pumps, generators, air compressors; or maintain vehicle battery charge under extreme electrical demands.

SEIC Enable/Disable Conditions

Vehicle Conditions to Enable SEIC (all are required)	Vehicle Conditions that Disable SEIC (any one required)	SEIC	Mobile Mode
Parking brake applied.	Parking brake disengaged.	Yes	No
Foot off of service brake	Depressing service brake	Yes (1)	No (2)
Vehicle in PARK (automatic trans.)	Vehicle taken out of PARK	Yes	No
Foot off of accelerator pedal	Accelerator pedal depressed	Yes	No
Vehicle speed is 0 mph (stationary)	Vehicle speed is not 0 mph (stationary)	Yes	No
Brake lights functional (Select model years)	Brake light circuit disconnected	Yes	Yes
Engine at a stable base idle speed		Yes	No
Transmission Oil Temp above 20°F	Transmission Oil Temperature (TOT) Limit exceeds 240°F on Diesel and 250°F on Gas	Yes (1)	Yes
Eng Coolant Temp above 20°F (3)	Engine Coolant Temperature (ECT) Limit	No	Yes
Eng Coolant Temp above 40°F (Select model years)	Engine Coolant Temperature (ECT) Limit	Yes (1)	No
	Catalyst Temperature Limit	Yes (1)	Yes

(1) A "Change-of-State" at the "PTO-Request" circuit is required to re-invoke SEIC. When a disabler is seen by the PCM, the "PTO-Indicator" circuit changes from "Ground-Source" to an "Open-Circuit". After approximately 3 seconds SEIC drops out, returning the engine speed to base idle. For vehicle-stationary operation, the automatic transmission torque converter unlocks as engine speed proceeds below 1200 RPM. To re-initiate SEIC the operator must turn off the aftermarket PTO switch (removing command voltage to the "PTO-Mode" circuit) and then turn it back on again.

(2) SEIC is automatically re-activated after approximately 3 seconds after the disabling condition is removed.

(3) MY2013 Gas Engine Applications Engine Coolant Temperature above 140°F.

Reference Ford Body Builder website for year specific information at https://www.fleet.ford.com/truckbbas/

Parker Chelsea

Parker Hannifin Corporation
Chelsea Products Division
Olive Branch, MS 38654 USA

TorqShift® 6R140 Transmission – Stationary Elevated Idle Control (SEIC) (Continued) 6.7L Diesel

Models Affected
Super Duty – MY2011-MY2018
Medium Duty – MY2016-MY2018

General System Behavior

- To guarantee full advertised torque capability at the automatic transmission PTO gear and through the aftermarket PTO clutch, the hydraulic line pressure serving the aftermarket PTO clutch must be elevated. Applying battery voltage to the PTO circuit is the signal to the transmission to enter SEIC strategy and this important functions. This applies to both stationary and mobile PTO operations.

- If an SEIC disabler occurs:
  - ALL engines will require a "change-of-state", meaning the operator is required to turn off voltage to the "PTO-Request" circuit, and back on again to re-invoke SEIC and PTO operation.

- Battery Charge Protection (BCP):
  - When it is switched on the engine speed goes immediately to 600 RPM and stays there even if the battery is fully charged. From this state it uses system voltage as well as ambient air temp., engine oil temperature information to raise engine speed higher to maintain a certain battery charge. Maximum engine speed in BCP mode is 1200 RPM.

- Auto Entry:
  - The BCP and Live-Drive operation modes allow PTO to engage automatically once the engine started provided the input switch is left in the on position prior to starting the engine. However, loss of an operating condition after PTO is initially engaged will require the switch to be cycled before PTO will re-engage.

- The Transmission Control Module (TCM) will turn off the PTO system when Transmission Oil Temperature (TOT) reaches 240°F on Diesel and 250°F on Gas.

- SEIC/PTO strategy function in the PCM is not affected by the loss of vehicle battery electrical power.

- SEIC Ramp Rate (fixed, not programmable):
  - When first applying battery voltage to the PTO circuit the PCM directs the engine to go to the initial target that it sees at the RPM circuit at 200 RPM/sec.
  - The correlation will be better for diesel engines since the diesel engine SEIC system offers buffered PCM voltage and ground circuits to complete the resistor circuits for engine speed.
  - If there is a high electrical demand on the chassis battery, such as from aftermarket inverters or generators, etc., the actual elevated idle engine speed may vary with that demand for any given resistance in the SEIC circuit.

TorqShift® 6R140 Transmission – Stationary Elevated Idle Control (SEIC) (Continued) 6.7L Diesel

Models Affected
Super Duty – MY2011-MY2018
Medium Duty – MY2016-MY2018

General System Behavior (Continued)

Special Situations

Stationary mode, Live Drive and Split Shaft operation are supported.

Stationary Mode
Operates in Park at elevated engine speed. The maximum load at the transmission PTO gear is 250 lbs-ft.

Mobile Mode
Operates in all gears and all vehicle speeds. The engine idle speed is slightly elevated, but peak engine speed is not limited beyond normal operating ranges. An additional rev limiter may be required to prevent over speed damage to attached pumps and equipment. The maximum load allowable for mobile mode is 150 lbs-ft at the transmission PTO gear. If the PTO feature is used for extended periods of time without vehicle movement it is recommended to switch to Stationary Mode.

Split Shaft Mode
NOTE: Split Shaft mode engagement procedure has changed for MY2013.

To install Split Shaft mode, wire according to the diagram shown on page 7 of Ford SVE Bulletin Q-180R4. Select elevated idle speed by installing a resistor (which provides voltage to PTO RPM input) as indicated in the wiring diagram. Split-Shaft mode requires that supply voltage (nominal 12VDC) be applied to both the PTORS1 and PTORS2 circuits.

Adaptive Cooling
This PCM strategy is new for 2011 6.7L diesel engine. It automatically restricts engine power when it senses an over-temperature condition, and may interrupt the SEIC-PTO operation. Typically, the over-temperature condition it reacts to will also show up on the temperature gage on the instrument panel. Elevated engine speed, typical of SEIC operation, may help avoid Adaptive Cooling occurrence due to the resultant additional engine and transmission coolant flow. However, depending on the auxiliary PTO power being demanded, 900 RPM may not be enough to prevent the power train from entering Adaptive Cooling mode, but 1500 RPM may.

TorqShift® 6R140 Transmission – Stationary Elevated Idle Control (SEIC) 6.8L Gas

Models Affected
Super Duty – MY2017-MY2018
Medium Duty – MY2013-MY2018

General System Behavior

Purpose to explain changes and functions of the (SEIC) system for Power Take-Off (PTO) applications.

Overview – SEIC and Transmission PTO (6.8L only)

- A powertrain control module (PCM) strategy that provides elevated engine speed to drive auxiliary commercial equipment such as hydraulic pumps, generators, air compressors; or maintain vehicle battery charge under extreme electrical demands.

- SEIC is standard in all PCMs for F650 with the 6.8L gas engine.

SEIC Enable/Disable Conditions

Vehicle Conditions to Enable SEIC (all are required)	Vehicle Conditions that Disable SEIC (any one required)	SEIC
Parking brake applied.	Parking brake disengaged.	Yes
Foot off of service brake	Depressing service brake	Yes (1)
Vehicle in PARK (automatic trans.)	Vehicle taken out of PARK	Yes
Foot off of accelerator pedal	Accelerator pedal depressed	Yes
Vehicle speed is 0 mph (stationary)	Vehicle speed is not 0 mph (stationary)	Yes
Brake lights functional (Select model years)	Brake light circuit disconnected	Yes
Engine at a stable base idle speed		Yes
Transmission Oil Temp above 20°F	Transmission Oil Temperature (TOT) Limit exceeds 240°F on Diesel and 250°F on Gas	Yes (1)
Eng Coolant Temp above 20°F (3)	Engine Coolant Temperature (ECT) Limit	No
Eng Coolant Temp above 40°F (Select model years)	Engine Coolant Temperature (ECT) Limit	Yes (1)
	Catalyst Temperature Limit	Yes (1)

(1) A "Change-of-State" at the "PTO-Request" circuit is required to re-invoke SEIC. When a disabler is seen by the PCM, the "PTO-Indicator" circuit changes from "Ground-Source" to an "Open-Circuit". After approximately 3 seconds SEIC drops out, returning the engine speed to base idle. For vehicle-stationary operation, the automatic transmission torque converter unlocks as engine speed proceeds below 1200 RPM. To re-initiate SEIC the operator must turn off the aftermarket PTO switch (removing command voltage to the "PTO-Mode" circuit) and then turn it back on again.

(2) SEIC is automatically re-activated after approximately 3 seconds after the disabling condition is removed.

(3) MY2013 Gas Engine Applications Engine Coolant Temperature above 140°F.

Reference Ford Body Builder website for year specific information at https://www.fleet.ford.com/truckbbas/

Parker Chelsea

Parker Hannifin Corporation
Chelsea Products Division
Olive Branch, MS 38654 USA

TorqShift® 6R140 Transmission – Stationary Elevated Idle Control (SEIC) (Continued) 6.8L Gas

Models Affected
Super Duty – MY2017-MY2018
Medium Duty – MY2013-MY2018

General System Behavior (Continued)

Customer Access Wires for SEIC and VSO/CTO/PARK Signals

- Located under hood, below left (passenger) side engine cowl.
- The final stage manufacturer or up-fitter is required to supply the customer interface equipment.

Transmission PTO Gear and Port

- Available on 6.8L F650.
- Available for TorqShift® 6-speed automatic transmission.
- The PTO gear is direct-splined to the torque converter cover and thus able to deliver power any time the engine is running, (i.e. no internal PTO clutch).
- NEVER use any sealer, especially silicone-based, on the PTO port gasket.
- The PTO gear delivers up to 250 lbs-ft torque to the aftermarket PTO, and can manage the heat of 40 HP continuously. Higher horsepower can be delivered, but for shorter durations depending on the amount of power required.

Product Descriptions/Special Situations
SEIC

- Intended to be commanded ONLY by applying battery voltage to certain customer-access blunt-cut wire circuits, and adding a target-speed resistor, and is only available when the vehicle road speed signal is zero.
- Includes a link circuit which changes from open-circuit to ground when enablers are met, that may be used to turn on an indicator lamp, while providing battery power to an aftermarket PTO clutch or solenoid.
- Ramp rates are fixed and cannot be altered by the customer.
- Maximum engine speed is 2400 RPM without PTO installed.

NOTE: Chelsea PTO output speed should not exceed 2500 RPM. The PTO is 124% of engine speed. **DO NOT** exceed 2,016 engine RPMs with Chelsea PTO installed.

- Minimum engine speed – Gas engine: 910 RPM approximately. Gas engine has a 900 RPM "stand-by" speed that it first goes to when SEIC is initiated to step it away from stall speed that it could dip to as PTO load is applied. This is an unusable speed for any application. However, a resistor can be chosen that sets the useable target speed for carrying an auxiliary load to just above 900 RPM This is mainly intended for applications using a FEAD-driven PTO device like a clutch-pump, because the TorqShift® torque converter cannot fully lock until 900 RPM engine speed RPM.

WARNING: Using the TorqShift® PTO below 900 RPM for the 6.8L risks transmission damage from over-heating, or aftermarket PTO clutch slippage debris.

This symbol warns of possible personal injury.

Reference Ford Body Builder website for year specific information at https://www.fleet.ford.com/truckbbas/

TorqShift® 6R140 Transmission – Stationary Elevated Idle Control (SEIC) (Continued) 6.8L Gas

Models Affected
Super Duty – MY2017-MY2018
Medium Duty – MY2013-MY2018

General System Behavior (Continued)

To guarantee full advertised torque capability at the 6.8L automatic transmission PTO gear and through the aftermarket PTO clutch, the transmission torque converter must be locked, and the hydraulic line pressure serving the aftermarket PTO clutch must be elevated. Applying battery voltage to the PTO circuit is the signal to the transmission to enter SEIC strategy and command these two important functions.

- If an SEIC enabling condition is not met upon SEIC initialization:
  - SEIC will not initialize. SEIC will require a "change-of-state" (voltage to both the "PTO_REQUEST" and "PTO_ENGAGE" circuits removed completely.) The enabling conditions must be met, and then SEIC and PTO operation may be initiated.

- If an SEIC disabler occurs:
  - GAS engines will require a "change-of-state", meaning the operator is required to turn off voltage to both the "PTO_REQUEST" and "PTO_ENGAGE" circuits, and back on again to re-invoke SEIC and PTO operation.
  - The Transmission Control Module (TCM) will turn off the PTO system when Transmission Oil Temperature (TOT) reaches 240°F on Diesel and 250°F on Gas.
  - SEIC/PTO strategy function in the PCM is not affected by the loss of vehicle battery electrical power.

- SEIC Ramp Rate Max (Not programmable and approximate):
  - 400 RPM/second up and 200 RPM/second down.

- Correlation between engine speed and resistor values:
  - The external voltage source that the aftermarket PTO system designer uses to command SEIC through the "PTO_REQUEST" or "PTO_ENGAGE" circuits must be the same as that used by the PCM internally for predictable SEIC function. Reasoning is that a fully-charged vehicle battery fluctuates with ambient temperature.
  - If there is a high electrical demand on the chassis battery, such as from aftermarket inverters or generators, etc., the actual elevated idle engine speed may vary with that demand for any given resistance in the SEIC circuit. This has a greater effect on gas engine systems than it does on diesel since gas engine uses chassis battery voltage as a reference.

Product Descriptions/Special Situations
SEIC (Continued)
- Normal base engine calibration allows approximately +/-50 RPM fluctuation. If any factory vehicle accessories are used during SEIC, e.g. a/c, defroster, etc., then that fluctuation may increase to approximately +/-100 RPM or more.
- The sudden loss of aftermarket PTO hydraulic pressure during SEIC/PTO operation, like a ruptured hose, may send SEIC engine speed to near 3000 RPM It is recommended that a hydraulic pressure switch linked to SEIC/PTO be added to disable SEIC/PTO when a hose ruptures.
- Because of a service brake circuit characteristic at engine-start, invoking SEIC may cause the diagnostic error code FFG_BOO to get flagged (recorded in the PCM). To avoid this, simply tap the service brake pedal sometime after engine-start and prior to invoking SEIC. Once the code is set, SEIC may not be available until it is erased.
- Gas engines require a "change-of-state" at the PTO_REQUEST and PTO_ENGAGE circuits whenever a disabler turns off SEIC (remove battery voltage signal and re-apply).

Reference Ford Body Builder website for year specific information at https://www.fleet.ford.com/truckbbas/

Parker Chelsea
Parker Hannifin Corporation
Chelsea Products Division
Olive Branch, MS 38654 USA

Notes

Parker Hannifin Corporation
Chelsea Products Division
Olive Branch, MS 38654 USA

247 Series

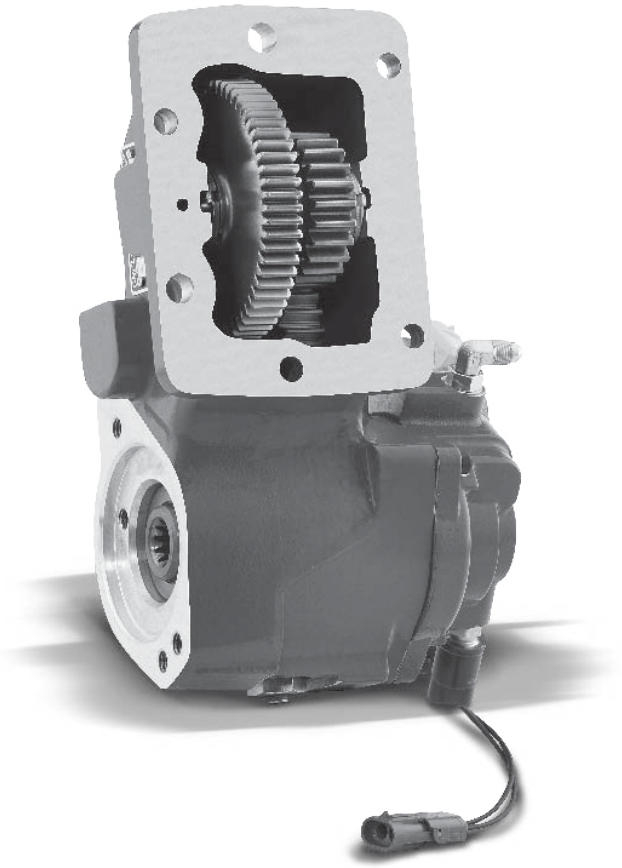

FORD TorqShift® 5R110 Transmission

Super Duty F250-550
6.7L Diesel MY2009-MY2010
6.8L Gas MY2009-MY2016

Parker Chelsea

Parker Hannifin Corporation
Chelsea Products Division
Olive Branch, MS 38654 USA

In-Cab PTO Switch Installation

NOTE: Before starting installation of the electrical wiring:

1. Disconnect the battery cables from the battery and secure to prevent accidental contact.

2. Locate a position in the cab for mounting the PTO switch and mounting bracket. The shaded area in **Fig. 1** shows the Occupant Protection Zone of the deployed air bags that are available in these vehicles.

WARNING: To avoid personal injury or equipment damage: Do not install any item from a Chelsea Power Take-Off (ie: PTO switch or mounting bracket) in the Occupant Protection Zone.

CAUTION: Before drilling any holes, make sure there is adequate clearance on both sides.

For electrical installation, see installation sketch on page 24 for Non-EOC and page 26 for EOC.

1. Locate suitable location to install PTO switch.

2. Locate and remove the customer access panel located on the lower left portion of the instrument panel (driver's side) (**Fig. 2**).

3. After determining the location of the PTO switch, run wiring assembly over to the area under the vehicle steering column. You are now ready to attach the wires from the Chelsea wiring harness.

NOTE: Wiring Strategy is slightly different between the Gas and Diesel engines. Use the charts listed on pages 25 and 27 for complete wiring chart information for prior years when using Chelsea wiring harness.

4. Located in the cabin, tagged and bundled above the parking brake assembly (**Fig. 3**), are the wires needed to connect the Chelsea PTO wiring harness to the Ford SEIC strategy. Wires that will be connected at this bundle from the Chelsea wiring harness are the Black, Orange, Yellow, White and Red wires. All have butt connector ends. Connect these wires using Wiring Charts page 25 or 27 of this manual.

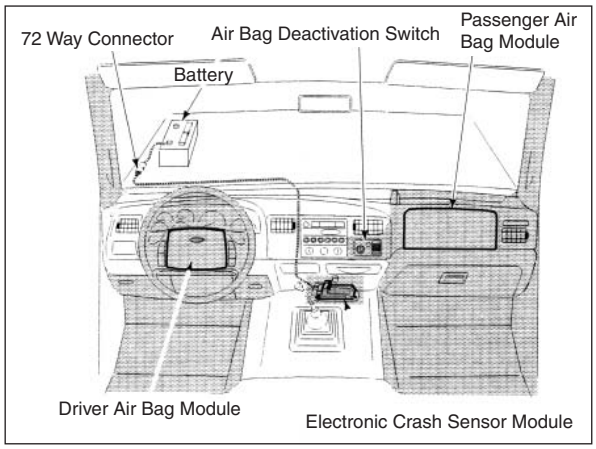

Figure 1

Figure 2


Figure 3


Figure 4

This symbol warns of possible personal injury.

Consult Ford Body Builder SVE Q-236R3

Parker Hannifin Corporation
Chelsea Products Division
Olive Branch, MS 38654 USA

In-Cab PTO Switch Installation (Continued)

5. Locate Ford circuit #294 (White w/ light blue) or for MY2008 circuit #CBP44 (purple). This wire can be found under-dash on the right side of the customer access and is blunt cut. Connect Chelsea wire White w/ Light Blue stripe using a butt connector to this Ford wire. Next, connect the black ground wire with a ring terminal to one of the screws located on the right side of the access area dash frame (**Fig. 4**). Reference Wiring Charts on page 25 or 27 of this manual.

NOTE: It is important to remember that a solid electrical connection is essential when installing any electrical device or option. A proper crimp is shown in **Fig. 5**.

6. Find a suitable location to route the wiring harness out of the cab area and to the location of the manifold. Make sure wiring is clear of driveline and exhaust.

CAUTION: Apply battery voltage to the Diesel "PTO" or "Gas PTO - Mode" (Circuit #2242), MY2008 (#CE912) wire is what the transmission looks for to initiate commands. Failing to do so may show up as low or oscillating hydraulic line pressure and low or no PTO torque or pump flow output. Any attempt to operate the Power Take-Off at elevated idle without these commands may result in under-capacity PTO clutch wear, resulting in rapid contamination of transmission fluid and internal transmission damage. This applies to both stationary and mobile automatic transmission PTO operations. Reference Wiring charts on pages 25 or 27.

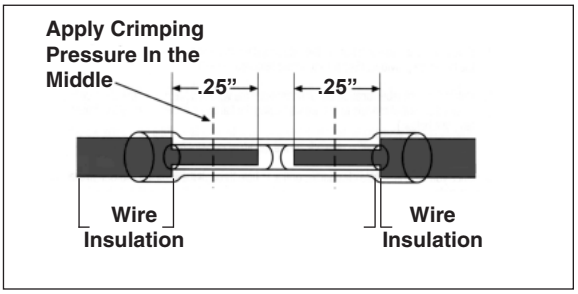

Figure 5

Ford LCF/International CF Overview MY2006-MY2010

Utilizing Chelsea wiring harness to wire a 247 Series PTO into a Ford LCF/International CF MY2006-MY2010.

CAUTION: Installing a transmission-mounted PTO without the required PTO wiring may result in transmission failure. To minimize the risk of transmission damage, PTO controls must be integrated into the vehicle wiring.

NOTE: Installation requires the lengthening and splicing of the MY2017 Chelsea harness.

Follow the normal PTO installation instructions provided.

1. Installer supplied wire will connect between the Chelsea supplied butt connectors (SK-448 or SK-449) and the OE supplied blunt connectors located in the blunt cut wiring bundle on the left side of the transmission (**Fig. 6**).

Chelsea switch panel mounting suggestion.

2. Switch panel may be located in cavity below the lighter (**Fig. 7**).

NOTE: Clearance cut required for fitment.

3. Relocate the relay located on the back of the Chelsea switch panel. It is adhered with double stick tape (**Fig. 8**).

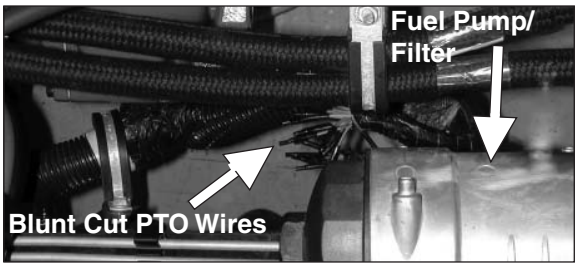

Figure 6

Figure 7


Figure 8

Mounting the PTO

CAUTION: When installing the PTO, always wear protective clothing and safety glasses.

Installation of a 247 PTO will be faster and easier if several steps are completed before mounting the unit to the transmission. On a clean secure work surface complete the following steps.

1. There are two split dowels that will act as guides when installing the PTO to the transmission. Gently squeeze the dowel together and install in the top and lower right side mounting hole of the PTO as shown in **Fig. 9**. The dowel should be flush with the side away from the mounting face (**Fig. 9 and 10**) and protrude into the corresponding mounting holes of the transmission aperture when installing the PTO.

2. Before installing the PTO remove the shift cable bracket that is to the right side of the PTO aperture. Use a 14mm wrench to remove the two capscrews. Remove the cable from the transmission range selector by pulling it straight off. Place the bracket and cable on the top of the transmission to allow easier installation of the PTO.

NOTE: On some early production Ford Super Dutys, the shifter bracket design was changed by about 3mm. The increase in size of the bracket interfered with the Power Take-Off. See appendix for Ford approved modification of this bracket for PTO clearance.

This transmission does not require the oil to be drained for PTO installation, but expect some oil to weep when covers and plugs are removed.

WARNING: Oil may be hot. Use extreme caution to assure that you do not accidentally come in contact with hot oil.

3. Remove the plug from the transmission pressure port (**Fig. 11**) and install the 90° male elbow in the opening. Position the fitting (**Fig. 12**) at a 10 o'clock position as you look at the fitting.

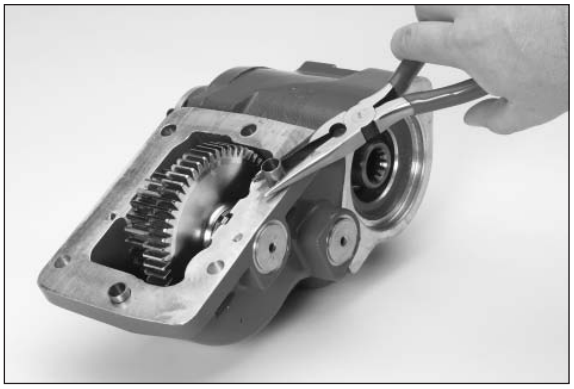
Figure 9

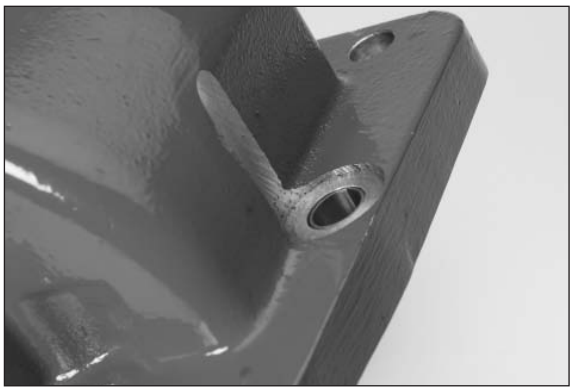
Figure 10


Figure 11

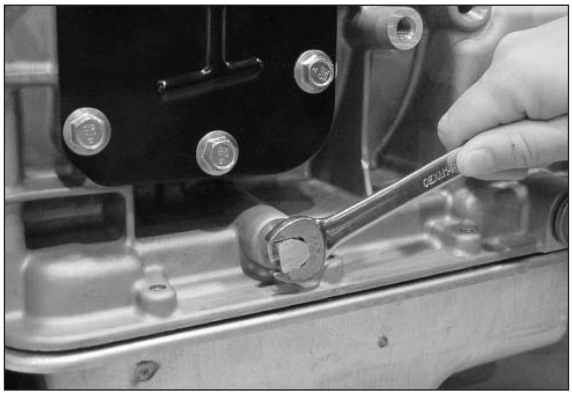
Figure 12

This symbol warns of possible personal injury.

Parker Hannifin Corporation
Chelsea Products Division
Olive Branch, MS 38654 USA

Mounting the PTO (Continued)

4. Remove the PTO aperture cover plate and gasket (**Fig. 13**).

IMPORTANT: Discard the gasket. It will NOT be used when installing the PTO on the transmission.

NOTE: All hose routing described herein is the recommended routing for the 6.8L gas engine. Other hose routing options may be required depending on the chassis model (4 x 2 or 4 x 4) and or engine selection (6.8L Gas or 6.0L Diesel).

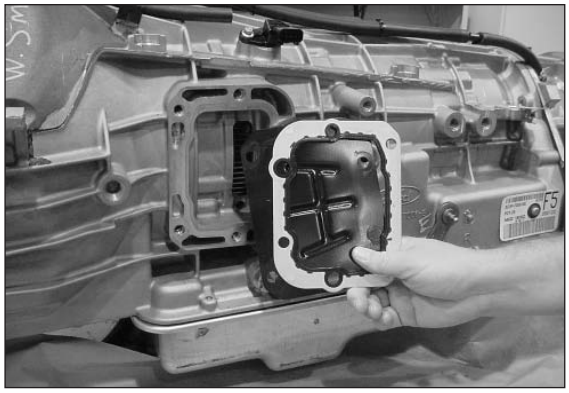

Figure 13

5. Connect hose (Transmission-to-Hydraulic Valve) to the fitting on the transmission. Route as shown in **Fig. 14**. Hold hose fitting in desired position and tighten lock nut with a wrench until solid feeling is encountered. From that point, apply one-sixth turn.

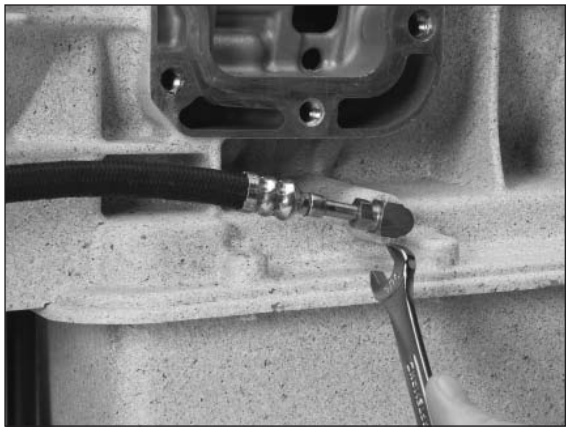

Figure 14

6. Six fasteners (**Fig. 15**) are used to attach the PTO to the transmission opening. The longest bolt requires an O-Ring on it to ensure a positive seal. Slide this on now after applying lube to the O-Ring.

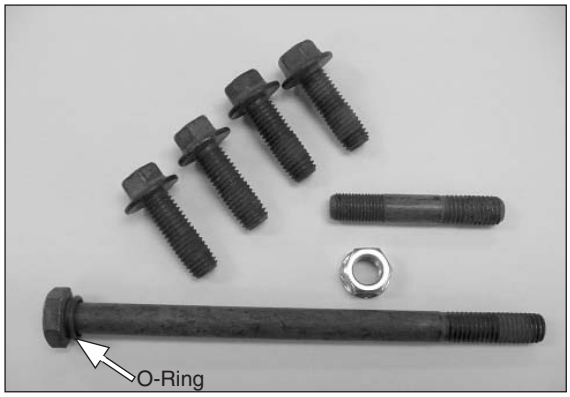

Figure 15

7. Slide the special gasket supplied with the PTO over the split dowels (**Fig. 16**) installed in the PTO. This is the controlled compression gasket that is used to eliminate the setting of the gear backlash between he PTO and transmission.

NOTE: Do not use sealing compounds because they are generally incompatible with automatic transmission fluids and could possibly contaminate valve bodies in the transmission.

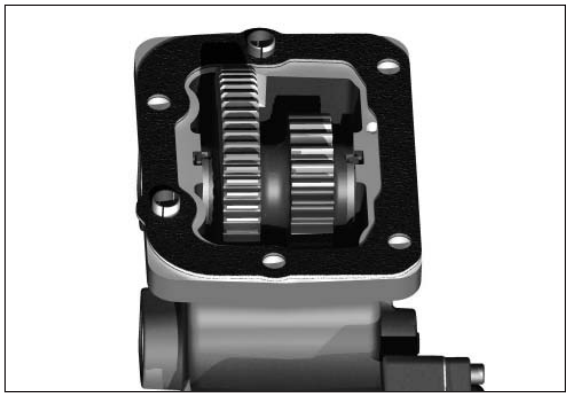

Figure 16

Mounting the PTO (Continued)

8. Install the stud from the stud kit in the top hole on the transmission PTO aperture pad (**Fig. 17**).

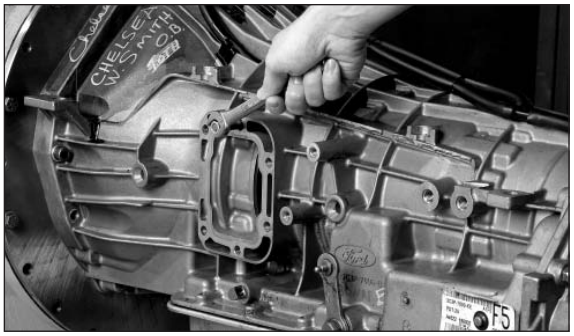

Figure 17

9. Tighten the stud and torque to 17-19 lbs-ft [23-26 Nm].

CAUTION: Overtightening of the stud may damage stud and/or Transmission threads.

10. Mount the PTO to the transmission at this time by sliding the top PTO mounting hole w/dowel pin over the shoulder stud. Guide other dowel pin into hole (**Fig. 18**).

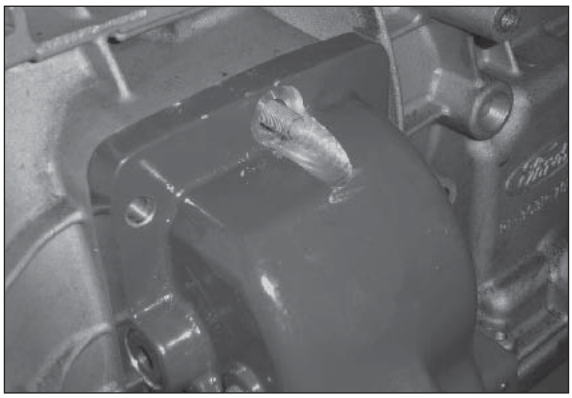

Figure 18

11. Attach the self-locking nut to the shoulder stud. Do not tighten down at this time (**Fig. 19**).

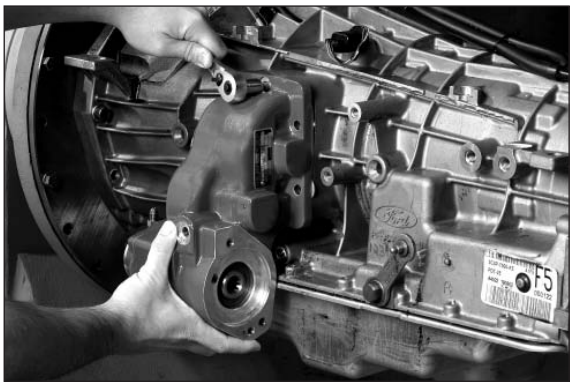

Figure 19

12. Make sure the O-Ring from the stud kit is still on the longer hex head capscrew. Install this hex head capscrew and O-Ring in the bottom mounting hole finger tight (**Fig. 20**).

IMPORTANT: Make sure the O-Ring is positioned in the counter bore.

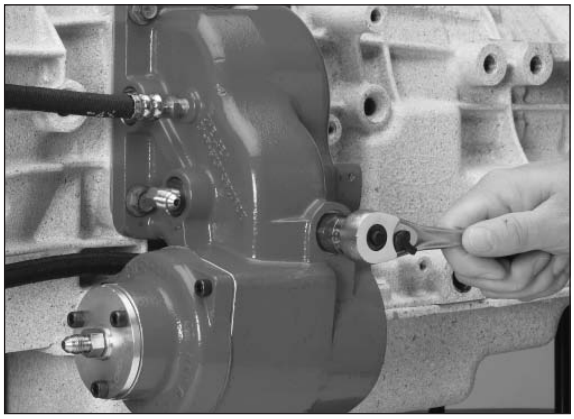

Figure 20

Parker Hannifin Corporation
Chelsea Products Division
Olive Branch, MS 38654 USA

Mounting the PTO (Continued)

13. Finish fastening the PTO to the transmission using the remaining (4) flange head hex bolts.

14. Torque all 5 capscrews (**Fig. 21**) to 25 lbs-ft [34 Nm] and torque the self-locking nut to 35-40 lbs-ft [48-54 Nm].

Figure 21

15. Reinstall the cable to the transmission selector and reattach the bracket that was removed in Step 14. Torque capscrews to 22-29 lbs-ft [30-40 Nm].

16. Install Transmission-to-Solenoid hose to the Hydraulic Valve Bearing Cap 90° Elbow fitting (**Fig. 22**).

Figure 22

17. Install PTO Pressure Switch into port on Hydraulic Valve Cap. Torque to 10-12 Lbs-ft (**Fig. 23**).

18. Install hydraulic pump or driveline as necessary. See page 50 for more pump mounting information.

Figure 23

Potentiometer Settings

Charts are located in the Appendix on pages 73-74.

CHASSIS	FUEL	MY2009	MY2010	MY2011	MY2012	MY2013	MY2014	MY2015	MY2016
Super Duty F250-550	Gas	Chart I	Chart I	Chart I	Chart I	Chart I	Chart I	Chart I	Chart III
	Diesel	Chart I	Chart I	Chart II	Chart II	Chart II	Chart II	Chart II	Chart III

Hose Assembly Identification Chart

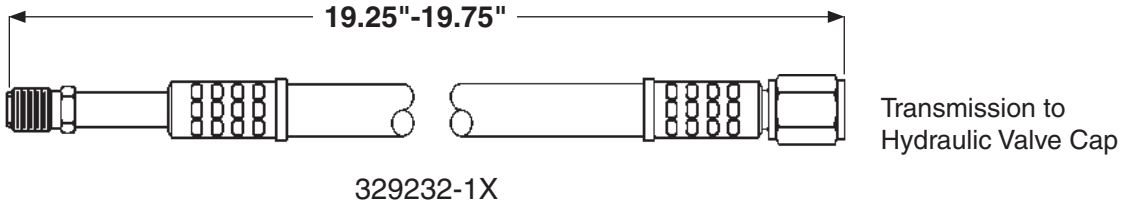

Wiring Installation (Shift Option B) (SK-448 Rev C)
Super Duty F250-550 – MY2005-MY2010 – Diesel/Gas
Super Duty F250-550 – MY2011-MY2016 – 6.8L Gas
Super Duty F250-550 – MY2006-MY2010 – LCF
w/o Electronic Overspeed Control (EOC)

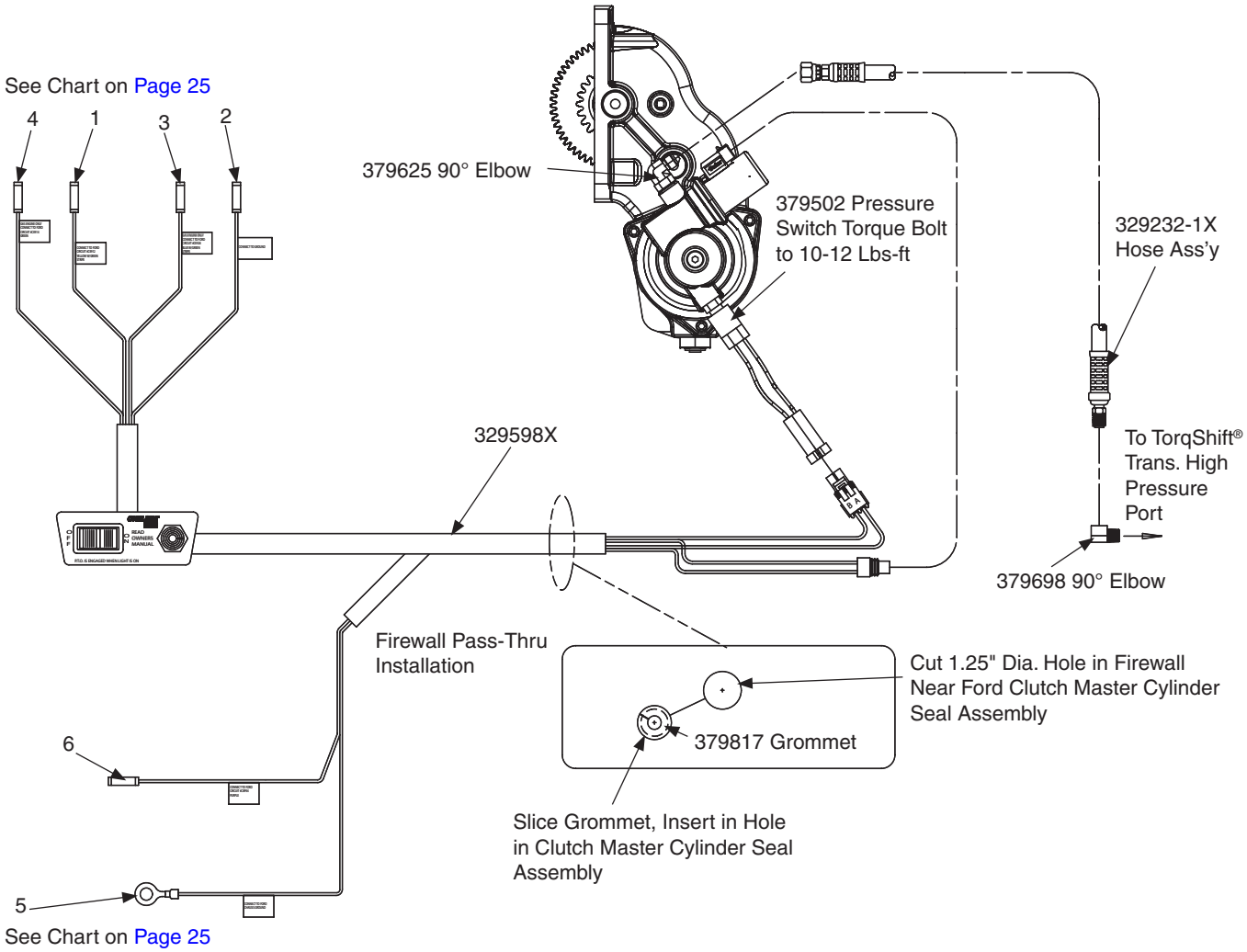

Parker Hannifin Corporation
Chelsea Products Division
Olive Branch, MS 38654 USA

Wiring Installation Chart (Shift Option B) w/o Electronic Overspeed Control (EOC)

(SK-448 Rev C)

MY2005-MY2010 Ford Super Duty – Diesel/Gas (Stationary Mode Only)						
Chelsea PTO Wire Harness		MY2005-MY2007 Connect to Ford Wire Number		Gas/Diesel	*MY2008-MY2010 Connect to Ford Wire Number	
		Ford Wire Color	Circuit		Ford Wire Color	Circuit
1 or	Orange			Both	Yellow/Green	#CE912
1	Orange	Orange	#2242	Diesel Only		
2	Black w/ Butt Connector	Orange/Lt. Blue (1)	#2244	Both	Blue/White (1)	#CE326
3	Yellow	Orange/White	#2243	Gas Only	Blue/Green	#CE924
4	Red	Orange/Yellow	#2246	Gas Only	Green	#CE914
5	Black w/ Ring Terminal	Connect to Dash Chassis Ground		Both	Connect to Dash Chassis Ground	
6	White/Light Blue	White/Blue	#294	Both	Purple	#CE914

NOTE: (1) For Mobile Operation Only Connect Black Wire w/ Butt Connector to Chassis Ground
* 2011 Gas Engine Only

MY2011-MY2016 Ford Super Duty – 6.8L Gas (Stationary Mode Only)				
Chelsea PTO Wire Harness		Gas	MY2011 (1) Connect to Ford Wire Number	
			Ford Wire Color	Circuit
1	Orange	Gas Only	Yellow/Green	#CE912
2	Black w/ Butt Connector	Gas Only	Blue/White	#CE326
3	Yellow	Gas Only	Blue/Orange	#CE933
4	Red	Gas Only	Green	#CE914
5	Black w/ Ring Terminal	Gas Only	Connect to Dash Chassis Ground	
6	White/Light Blue	Gas Only	White/Blue (2)	#CDC64

NOTE: (1) MY2011-MY2012 Gas Engine Only
(2) Trucks built prior to May 15, 2010 this Ford wire is Yellow w/Orange Stripe

*MY2006-MY2010 Ford & International LCF			
Chelsea PTO Wire Harness		Connect to Ford Wire Number	
		Ford Wire Color	Circuit
1	Orange	Purple/Light Green	#2335
1	Orange	Light Blue/Red	#2231
1	Orange	Dark Green/White	#1924
2	Black w/ Butt Connector	Brown/Yellow	#2334
3	Yellow	Not Used	
4	Red	Not Used	
5	Black w/ Ring Terminal	Connect to Dash Chassis Ground	
6	White/Light Blue	Dark Green/Yellow	#2335

* **NOTE:** Installer must provide wires to connect between the vehicle blunt wire connections and the Chelsea Wiring Harness 329598X.

Parker Chelsea
Parker Hannifin Corporation
Chelsea Products Division
Olive Branch, MS 38654 USA

Wiring Installation (Shift Option K)
Super Duty F250-550 – MY2005-MY2016 – 6.8L Gas
Super Duty F250-550 – MY2005-MY2010 – 6.0L/6.4L Diesel
LCF – MY2005-MY2009
w/o Electronic Overspeed Control (EOC)

(SK-474 Rev A)

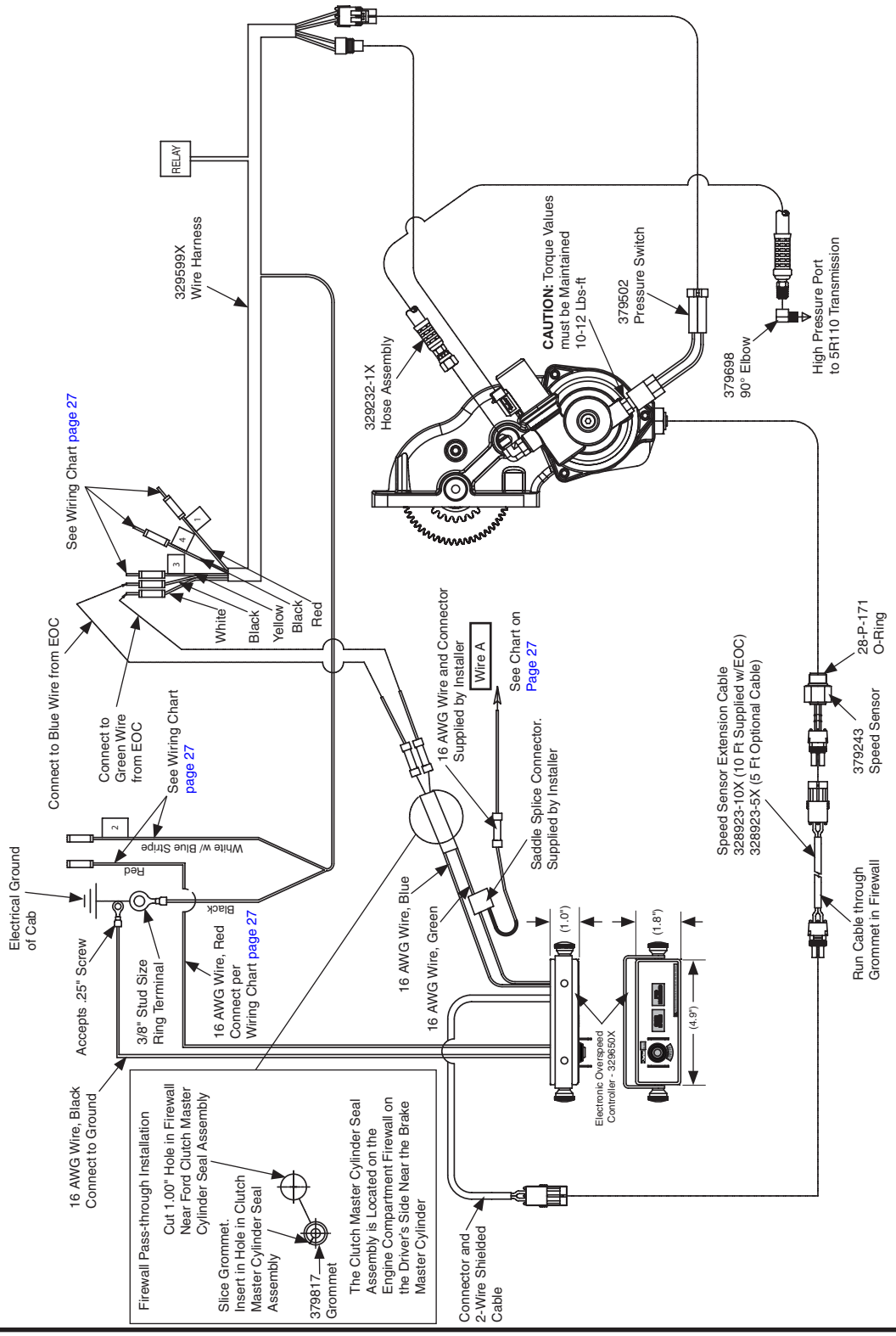

Installation Kits: 329255-12X
329601X

NOTE: Strip Wire Ends 0.25" Prior to Installing Connector

Parker Chelsea

Parker Hannifin Corporation
Chelsea Products Division
Olive Branch, MS 38654 USA

Wiring Installation Chart (Shift Option K) w/ Electronic Overspeed Control (EOC) (SK-474 Rev A)

Chelsea Wire	2005-2007 Super Duty 6.0L Diesel	2005-2007 Super Duty 6.8L Gas	2008-2010 Super Duty 6.4L Diesel	2008-2010 Super Duty 6.8L Gas	2005-2009 LCF 4.5L Diesel	2011-2016 Super Duty 6.8L Gas
1	Not Used	Ford Circuit #2246 Orange/ Yellow	Not Used	Ford Circuit #CE914 Green	Not Used	Ford Circuit #CE914 Green
2	Not Used	Ford Circuit #294 White/ Lt. Blue	Not Used	Ford Circuit #CBP44 Purple	Not Used	Ford Circuit #CDC64 White/Blue (1)
3	Not Used	Ford Circuit #2243 Orange/ White	Not Used	Ford Circuit #CE924 Blue/ Green	Not Used	Ford Circuit #CE933 Blue/ Orange
4	Ground	Ford Circuit #2244 Orange/ Lt. Blue	Ground	Ford Circuit #CE326 Blue/ White	Ground	Ford Circuit #CE326 Blue/ White
EOC Box Wire A	Ford Circuit #2242 Orange	Ford Circuit #2242 Orange	Ford Circuit #CE912 Yellow/ Green	Ford Circuit #CE912 Yellow/ Green	Ford/International Circuit #2335 Purple/Lt. Green	Ford Circuit #CE912 Yellow/ Green
EOC Box Red	Ford Circuit #294 White/ Lt. Blue	Ford Circuit #294 White/ Lt. Blue	Ford Circuit #CBP44 Purple	Ford Circuit #CBP44 Purple	Ford/International Circuit #1043 Dark Green/ Yellow	Ford Circuit #CDC64 White/Blue (1)

NOTE: (1) Trucks built after May 15, 2010. Trucks built prior to May 15, 2010 this Ford wire is Yellow/Orange Stripe

Parker Chelsea
Parker Hannifin Corporation
Chelsea Products Division
Olive Branch, MS 38654 USA

Notes

Parker Hannifin Corporation
Chelsea Products Division
Olive Branch, MS 38654 USA

249/249V Series

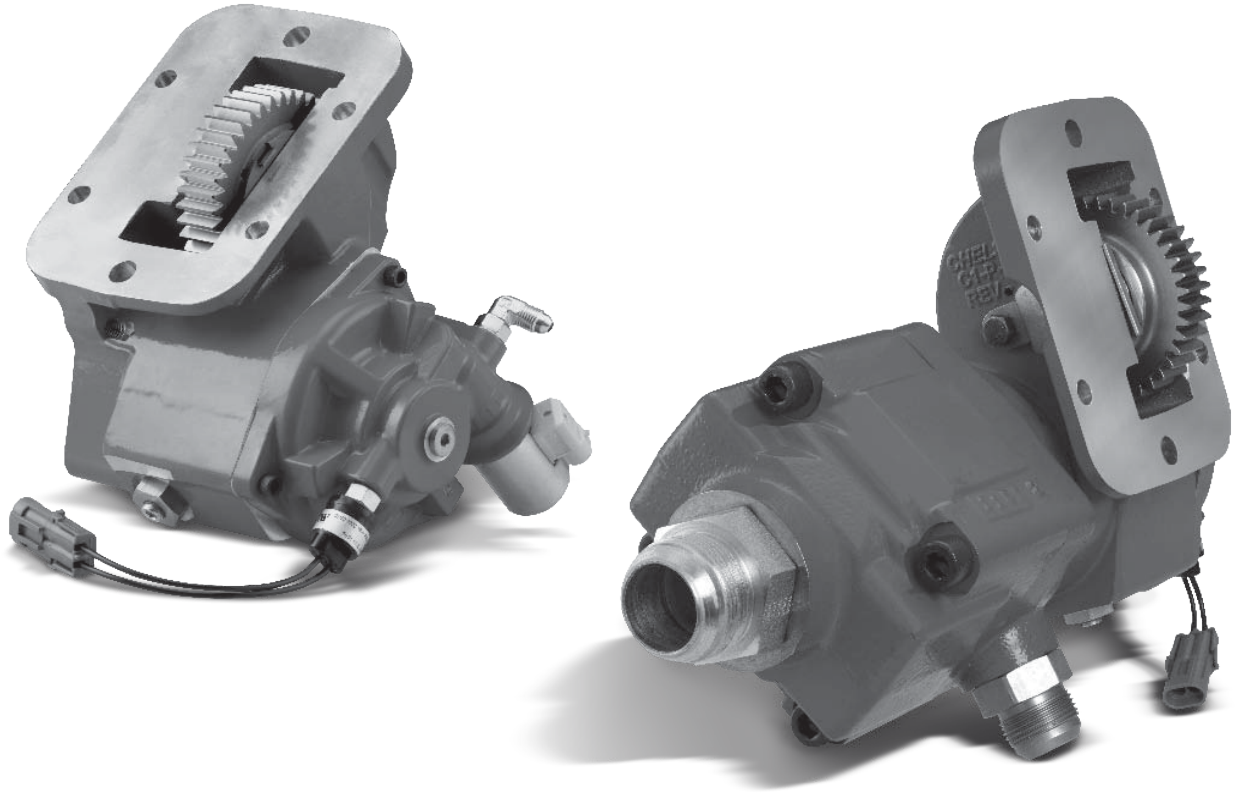

FORD TorqShift® 6R140 Transmission

Super Duty F250-550
6.7L Diesel MY2011-MY2018
6.2L/6.8L Gas MY2017-MY2018

Medium Duty F650/750
6.7L Diesel MY2016-MY2018
6.8L Gas MY2013-MY2018

Parker Chelsea

Parker Hannifin Corporation
Chelsea Products Division
Olive Branch, MS 38654 USA

Super Duty F250-550 – MY2011-MY2018 – 6.7L Diesel
Medium Duty F650/750 – MY2016-MY2018 – 6.7L Diesel
In-Cab PTO Switch Installation

NOTE: Before starting installation of the electrical wiring:

1. Disconnect the battery cables from the battery and secure to prevent accidental contact.

2. Locate a position in the cab for mounting the PTO switch and mounting bracket. The shaded area in **Fig. 24** shows the Occupant Protection Zone of the deployed air bags that are available in these vehicles.

WARNING: To avoid personal injury or equipment damage: Do not install any item from a Chelsea Power Take-Off (ie: PTO switch or mounting bracket) in the Occupant Protection Zone.

CAUTION: Before drilling any holes, make sure there is adequate clearance on both sides.

For electrical installation see installation sketch on page 42 for Non-EOC and page 48 for EOC.

3. Locate the Ford wiring to be connected to the Chelsea PTO harness.

   a. MY2017-MY2018 F250-550 blunt cut wires located at passenger side kick panel.

   b. All Others - Ford wiring is located behind the customer access panel located directly under the steering column (**Fig. 25**).

4. After determining the location of the PTO switch, run wiring assembly over to the area of the blunt cut wires. You are now ready to attach the wires from the Chelsea wiring harness to the Ford wires.

NOTE: For MY2017-MY2018 F250-550, all necessary wires are in the Ford wiring harness.

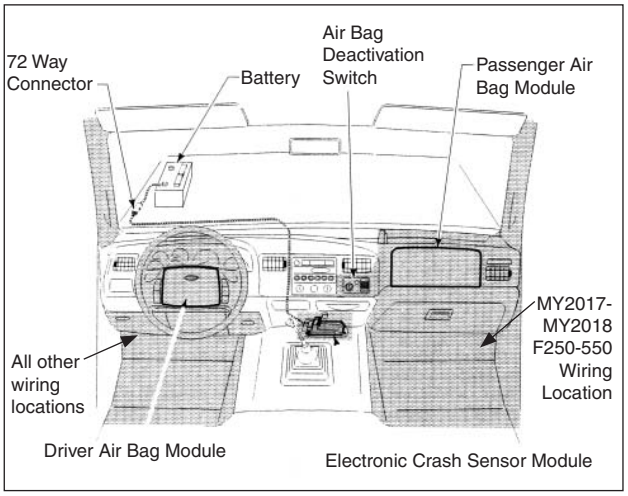

Figure 24

Figure 25

This symbol warns of possible personal injury.

Parker Hannifin Corporation
Chelsea Products Division
Olive Branch, MS 38654 USA

Super Duty F250-550 – MY2011-MY2018 – 6.7L Diesel
Medium Duty F650/750 – MY2016-MY2018 – 6.7L Diesel
In-Cab PTO Switch Installation

5. Connect the Chelsea wiring harness to the FORD blunt cut wires per the wiring chart on page 43 and 49. Butt connectors are provided on the Chelsea wiring harness (**Fig. 26**).

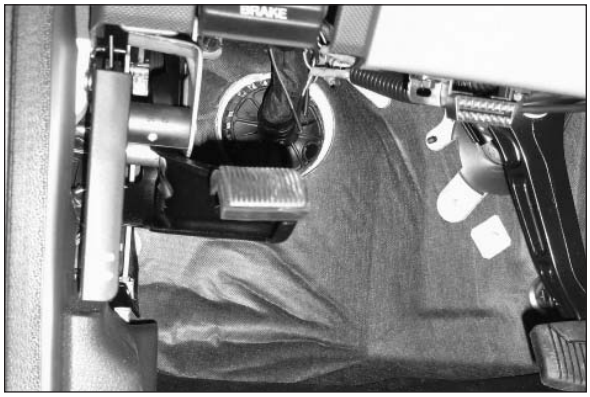

Figure 26

Splice/Repair
When necessary to splice wire for repair or circuit length revisions, the following guide should be followed:

- Wire ends should be stripped making sure that individual conductor strands are not damaged.
- When soldering, make sure an adequate mechanical joint exists before applying solder. Use only rosin core solder — never acid core.
- For crimp joints, use butt-type metal barrel fasteners and a proper tool (such as Motorcraft crimp tool S-9796) specifically designated for this type of work.
- Splice joints must be adequately sealed and insulated. Adhesive-lined heat shrink tubing is highly recommended to cover soldered and bare metal barrel crimp joints.
- The most durable splice joint will be bare metal barrel crimped, flow-soldered and covered with adhesive lined heat shrink tubing. This is recommended as the preferred splice joint.

NOTE: It is important to remember that a solid electrical connection is essential when installing any electrical device or option. A proper crimp is shown in **Fig. 28**.


Figure 27

6. Attach the ground wire Black with ring terminal (3/8") on its end to a confirmed ground location (**Fig. 27**). Reference Wiring Charts on page 43 or 49 of this manual.

7. Find a suitable location to route the wiring harness out of the cab area and to the location of the manifold. Make sure wiring is clear of driveline and exhaust. See page 42 and 48 for information.

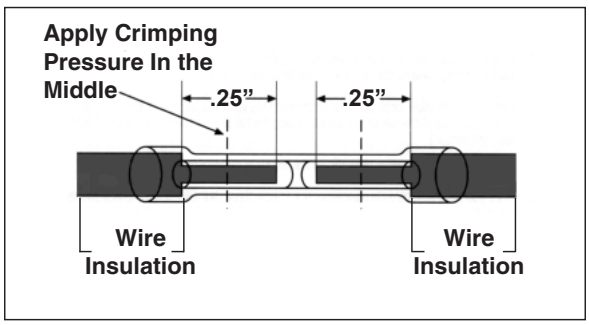

Figure 28

CAUTION: A battery voltage to the Diesel "PTO" wire is what the transmission looks for to initiate commands. Failing to do so may show up as low or oscillating hydraulic line pressure and low or no PTO torque or pump flow output. Any attempt to operate the Power Take-Off at elevated idle without these commands may result in under-capacity PTO clutch wear, resulting in rapid contamination of transmission fluid and internal transmission damage. This applies to both stationary and mobile automatic transmission PTO operations. Reference Wiring charts on pages 43 or 49.

NOTE: Chelsea Wiring Harness includes a potentiometer factory set to Maximum Resistance which defaults to the minimum engine RPM established by Ford. See pages 73-74 for more information.

Super Duty F250-550 – MY2017-MY2018 – 6.2L/6.8L Gas
Medium Duty F650/750 – MY2013-MY2018 – 6.8L Gas
In-Cab PTO Switch Installation

NOTE: Before starting installation of the electrical wiring:

1. Disconnect the battery cables from the battery and secure to prevent accidental contact.

2. Locate a position in the cab for mounting the PTO switch and mounting bracket. The shaded area in **Fig. 29** shows the Occupant Protection Zone of the deployed air bags that are available in these vehicles.

WARNING: To avoid personal injury or equipment damage: Do not install any item from a Chelsea Power Take-Off (ie: PTO switch or mounting bracket) in the Occupant Protection Zone.

CAUTION: Before drilling any holes, make sure there is adequate clearance on both sides.

For electrical installation see installation sketch on page 44 for Non-EOC.

3. Locate the Ford wiring to be connected to the Chelsea PTO harness.

   a. MY2017-MY2018 F250-550 blunt cut wires located at passenger side kick panel.

   b. All Others - Locate and remove the customer access panel located directly under the steering column (**Fig. 31**)

4. Run the wiring assembly over to the area of the located Ford wiring. You are now ready to attach the wires from the Chelsea wiring harness.

5. Next locate the Ford ignition switch wire. Connect the Chelsea 12V wire to the Ford ignition wire (**Fig. 32**).

NOTE: For F250-550 MY2017-MY2018, all necessary wires are in the Ford wiring harness.

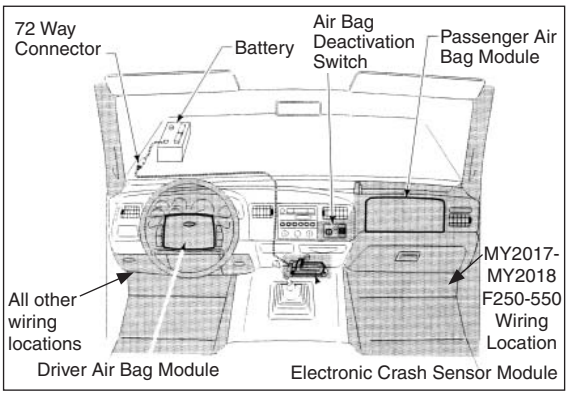

Figure 29

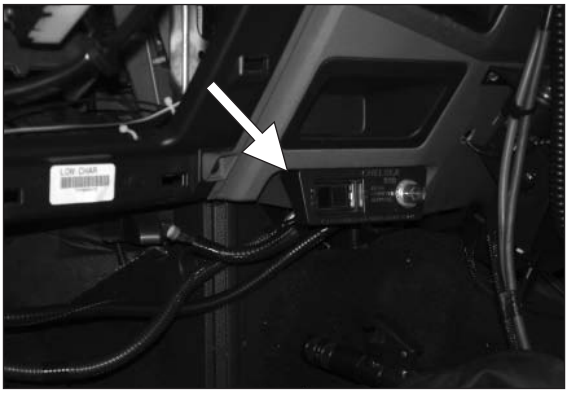
Figure 30

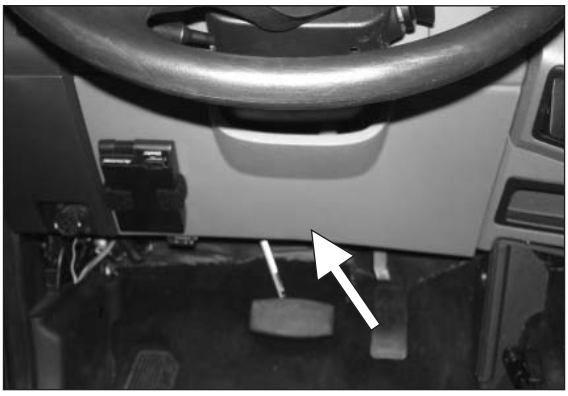
Figure 31

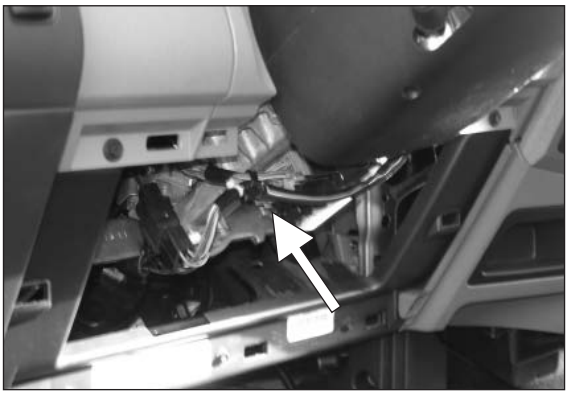
Figure 32

Parker Hannifin Corporation
Chelsea Products Division
Olive Branch, MS 38654 USA

Super Duty F250-550 – MY2017-MY2018 – 6.2L/6.8L Gas (Continued)
Medium Duty F650/750 – MY2013-MY2018 – 6.8L Gas
In-Cab PTO Switch Installation

6. Remove the kick panel in front of the door just above the floor board for F650-750 only (**Fig. 33**).

7. Connect the Chelsea Black wire w/ring connector (3/8") to the Ford ground screw that is located in an area that is paint free (**Fig. 34**).

NOTE: Chelsea Wiring Harness includes a potentiometer factory set to Maximum Resistance. See pages 73-74 for more information.

Splice/Repair
When necessary to splice wire for repair or circuit length revisions, the following guide should be followed:

- Wire ends should be stripped making sure that individual conductor strands are not damaged.
- When soldering, make sure an adequate mechanical joint exists before applying solder. Use only rosin core solder — never acid core.
- For crimp joints, use butt-type metal barrel fasteners and a proper tool (such as Motorcraft crimp tool S-9796) specifically designated for this type of work.
- Splice joints must be adequately sealed and insulated. Adhesive-lined heat shrink tubing is highly recommended to cover soldered and bare metal barrel crimp joints.
- The most durable splice joint will be bare metal barrel crimped, flow-soldered and covered with adhesive lined heat shrink tubing. This is recommended as the preferred splice joint.

NOTE: It is important to remember that a solid electrical connection is essential when installing any electrical device or option. A proper crimp is shown in (**Fig. 35**).

8. Find a suitable location to route the blunt cut and PTO connector wiring harnesses out of the cab area.

F650/750 only
9. The Ford SEIC blunt-cut customer service wires are located under hood, on the right (passenger) side of the engine compartment, below the cowl (**Fig. 36**).

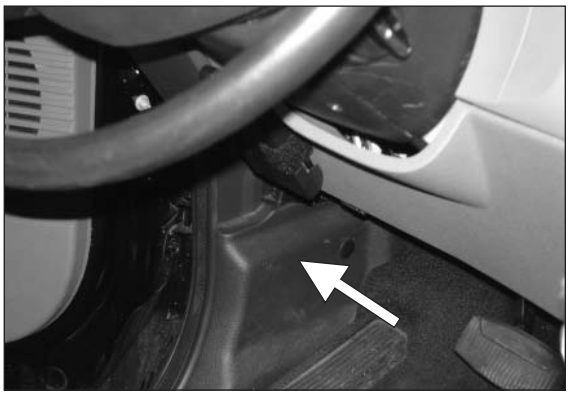
Figure 33

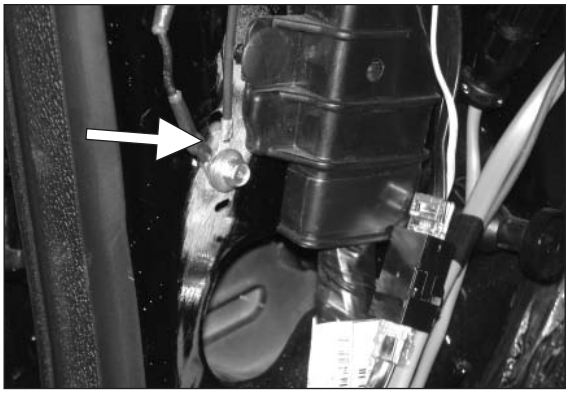
Figure 34

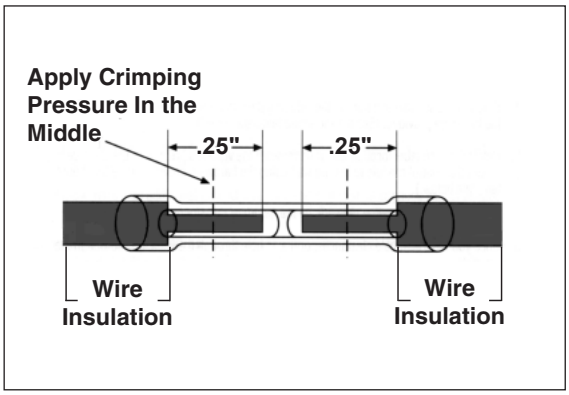

Figure 35

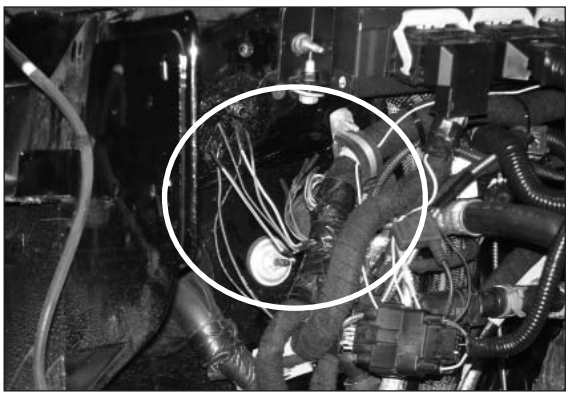
Figure 36

Parker Chelsea
Parker Hannifin Corporation
Chelsea Products Division
Olive Branch, MS 38654 USA

Super Duty F250-550 – ALL
Medium Duty F650/750 – ALL
PTO Installation

PTO Installation – Overview

Figure 37

1. Refer to pages 34-39 of this manual for PTO installation.

2. PTO installation is the same basic installation as on the Ford Super Duty Vehicles. But, on the 6.8L Gas, a heat shield is required to protect the PTO and accessories such as the PTO electrical wiring and the transmission-to-PTO hydraulic hose.

3. Hose Routing – It is critical that the hose be routed to ensure it does not touch the exhaust.

   - The PTO fitting should be indexed at 90 degrees and the transmission fitting indexed at 45 degrees. Route the hose as shown in (**Fig. 37**).

4. Electrical – Solenoid and pressure switch connections.

   - Route the wiring harness with heat resistant wire guard to connect the solenoid and pressure switch. Position so the harness is not in contact with the exhaust pipe. Zip tie the harness to the Ford shift linkage cable after the connections to the PTO are complete.

PTO Installation – Pre-work

CAUTION: When installing the PTO, always wear protective clothing and safety glasses.

Overview: The 249 Series comes in two main sections.

1. A geared adapter section (**Fig. 38**).

2. Main PTO housing. This unique design allows for time saving installation on both 4 x 2 and 4 x 4 Super Duty applications (**Fig. 39 and Fig. 40**).

NOTE: There are two split dowels that will act as guides when installing the adapter to the transmission. These come pre-installed in the adapter (**Fig. 41**).

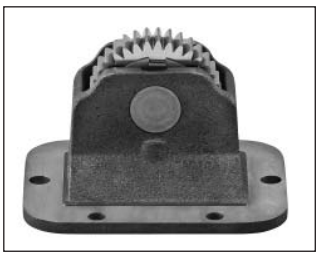
Figure 38

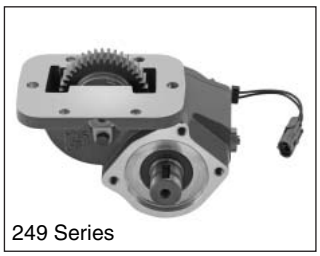

Figure 39

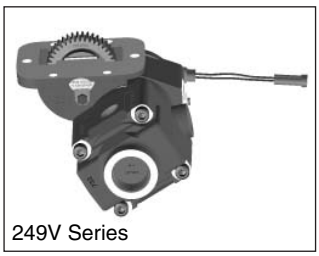

Figure 40

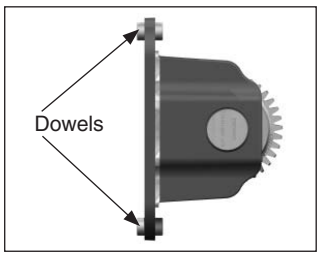

Figure 41

PTO Installation

IMPORTANT: MY2017-MY2018 F250-550 4x4 with manual transfer case shifter - the manual shift cable has a bracket connected to the PTO aperture that needs to be relocated as it will interfere with PTO installation. Contact your local Ford Dealer or Ford Body Builders Advisory Service at 877-840-4338 or https://www.fleet.ford.com/truckbbas/

NOTE: Dropping the 4WD auxiliary shaft will provide more room for installation, but it is not required for all applications.

NOTE: The removal of the transmission electrical connection plug will aid in the installation of the PTO (**Fig. 42**) (**249V**).

This transmission does not require the oil to be drained for the PTO installation, but expect some oil to weep when covers and plugs are removed.

WARNING: Oil may be hot. Use extreme caution to assure that you do not accidentally come in contact with hot oil.

3. Remove the plug from the transmission pressure port (**Fig. 43**) and install fitting in the opening (**Fig. 44**).

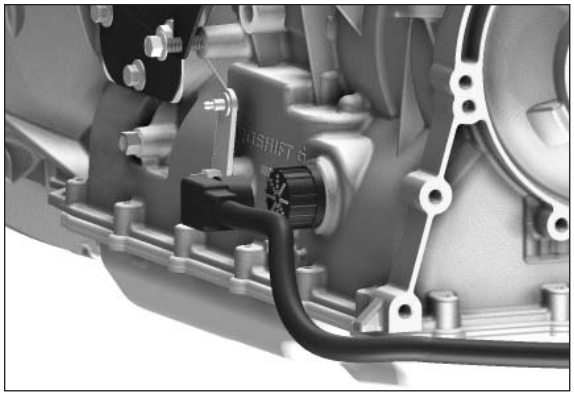

Figure 42

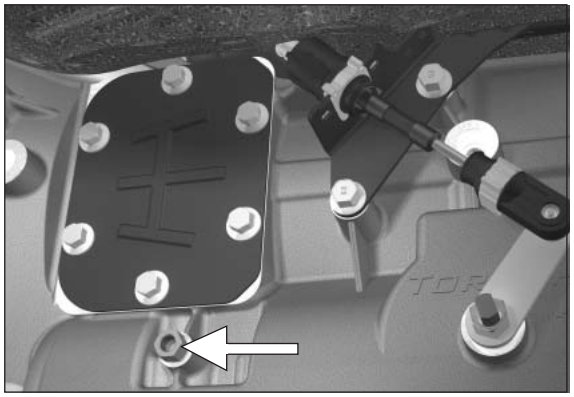

Figure 43

IMPORTANT: Both Washers and the O-Ring must be present at installation. The second Washer must fit around the O-Ring for proper seal (**Fig. 44**).

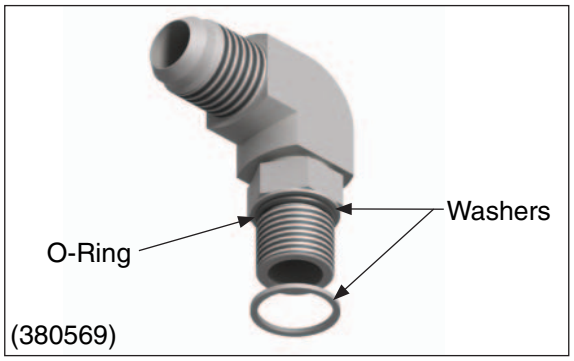

Figure 44

PTO Pressure/Lube Fitting & Hose:
380569 90° Adapter Fitting (1 each) (**Fig. 44**).
329130-3X Hose Assembly (1 each) (**Fig. 45**).

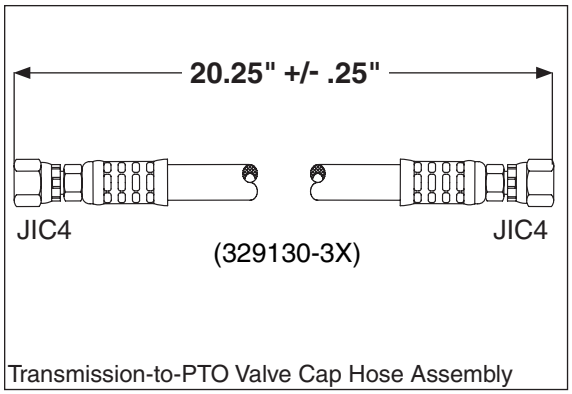

Figure 45

This symbol warns of possible personal injury.

PTO Installation (Continued)

4. Remove the PTO aperture cover plate and gasket (**Fig. 46 & 46a**). DO NOT Discard the gasket. It will be used when installing the adapter on the transmission.

IMPORTANT: Inspect the gasket for rips, tears, and deformities that may cause leaks. If there are any questions about the integrity of the gasket, replace with a new gasket.

NOTE: PTO installation may be easier if the shifter lever and bracket are removed. Hold PTO in position to see if the PTO/Pump can be installed without removing the transmission shifter. If shifter or bracket needs to be removed (see pages 77-80) (**249V**).

5. Six fasteners (**Fig. 47 or 48**) are used to attach the PTO to the transmission opening.

NOTE: Do not use sealing compounds because they are generally incompatible with automatic transmission fluids and could possibly contaminate valve bodies in the transmission.

6. **249** - Install the three studs from stud kit (**Fig. 47**). Install the two longer studs at 12 o'clock and 6 o'clock and the shorter stud at the 8 o'clock location on the transmission aperture pad (**Fig. 49**).

   249V - Install the six studs from stud kit (**Fig. 48**). Install the two shorter studs at 4 o'clock and 8 o'clock and the longer studs in the other locations on the transmission aperture pad.

CAUTION: Over tightening of the studs or running the shoulder past the transmission mounting surface may damage stud and/or Transmission threads (249).

7. **249** - Install the three studs until the shoulder of the stud is flush with the transmission mounting surface.

   249V - Tighten the stud and torque to 17-19 lbs-ft [23-26 Nm].

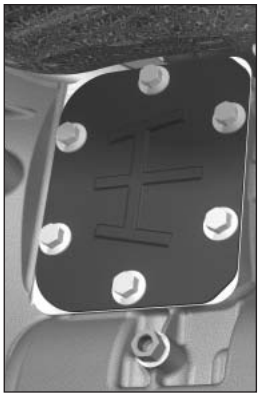
Figure 46

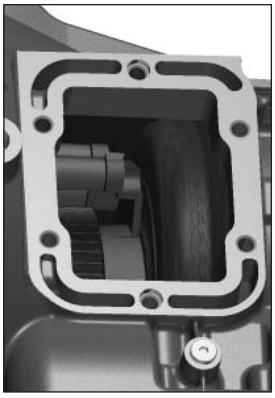
Figure 46a

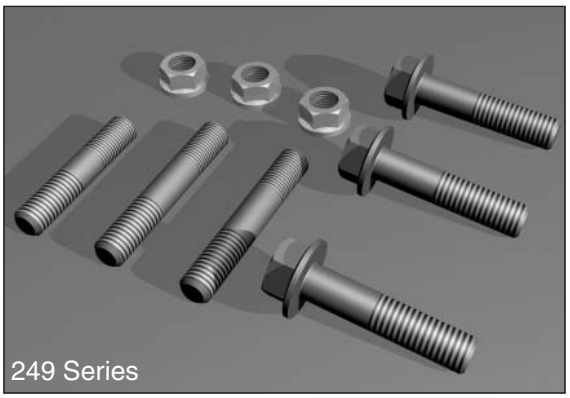

Figure 47

Figure 48

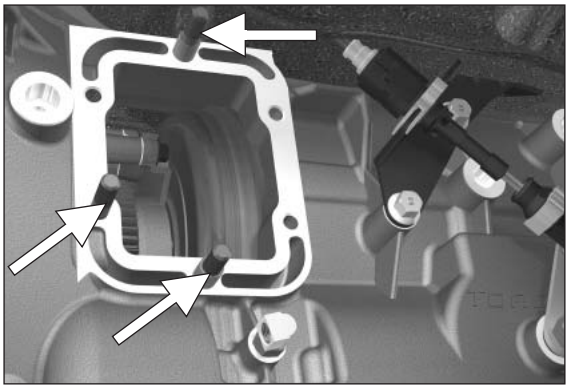
Figure 49

PTO Installation (Continued)

CAUTION: Overtightening of the stud may damage stud and/or Transmission threads (**249V**).

8. Slide the gasket supplied with the transmission over the dowel pins on the geared adapter (**Fig. 50**).

Figure 50

9. Install the geared adapter into the transmission aperture and over the studs (**Fig. 51**).

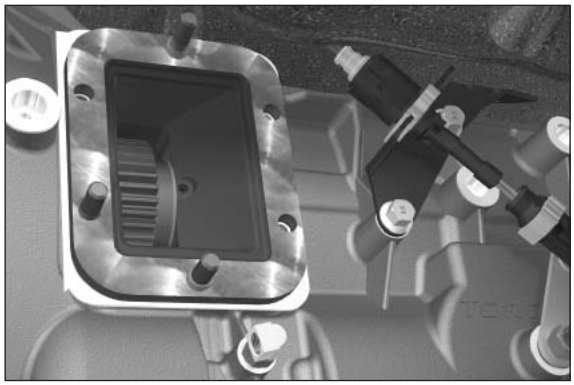
Figure 51

10. Install the gasket supplied with the PTO over the studs and against the geared adapter (**Fig. 52**).

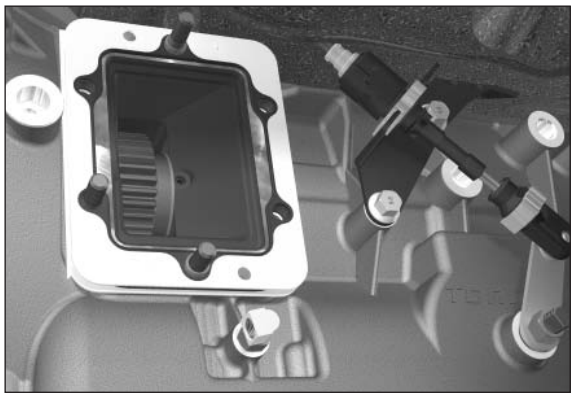
Figure 52

11. Install the PTO over the studs and attach the self-locking nuts to the top shoulder stud and left top shoulder stud. **DO NOT** tighten down at this time (**Fig. 53**).

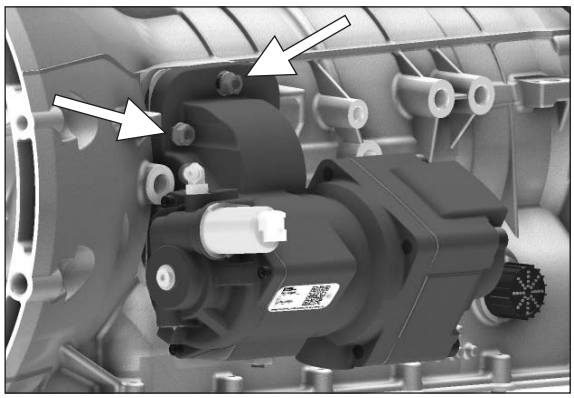
Figure 53

PTO Installation (Continued)

12. Install the bottom two self-locking nuts. **DO NOT** tighten down at this time (**Fig. 54**).

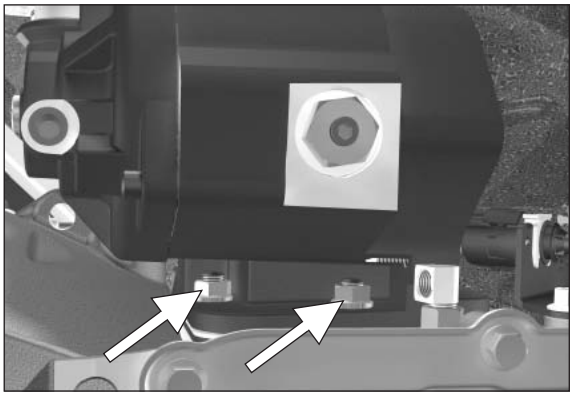

Figure 54

13. **249** - Next, install the three remaining hex capscrews in the remaining holes (**Fig. 55**).

    249V - Next, install the two remaining locking nuts on the top and middle right side studs (**Fig. 55**).

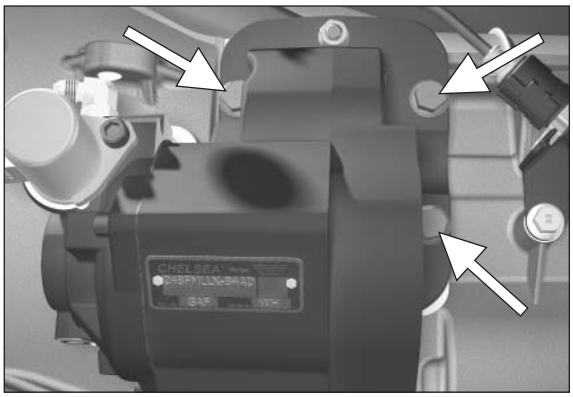

Figure 55

14. Torque all capscrews (**Fig. 56**) to 25 lbs-ft [34 Nm] and torque the self-locking nuts to 35-40 lbs-ft [48-54 Nm].

NOTE: Always torque fasteners in a crossing pattern (**Fig. 56**).

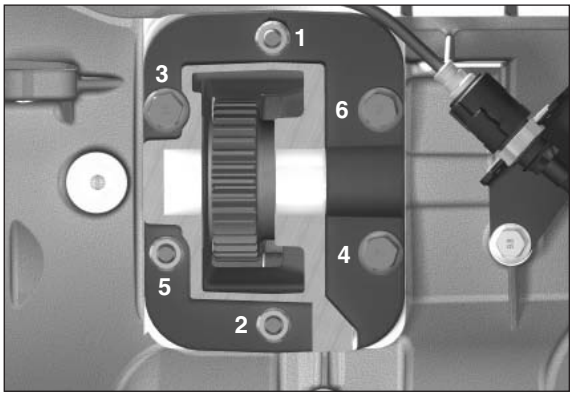

Figure 56

15. Connect hose (Transmission-to-PTO Valve) to the fitting on the transmission. Route as shown in **Fig. 57**. Hold hose fitting in desired position and tighten lock nut with a wrench until solid feeling is encountered. From that point, apply one-sixth turn. Next, connect the other end of the hose to fitting on the PTO valve cap. Tighten until solid feeling is encountered. From that point, apply one-sixth turn.

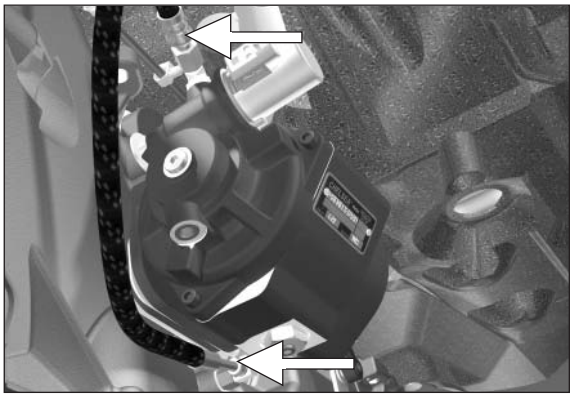

Figure 57

WARNING: Oil may be hot. Use extreme caution to assure that you do not accidentally come in contact with hot oil.

This symbol warns of possible personal injury.

PTO Installation (Continued)

16. Install the PTO pressure switch onto port on the Hydraulic Valve Cap. Torque to 10-12 Lbs-ft (**Fig. 58**).

17. Connect wiring harness as shown on pages 42-49.

18. If installing a Chelsea Pump, see page 50 for pump installation and bolt torque specifications (**249**).

19. Reinstall the transmission electrical connection plug. Verify that the connector has a tactile click when reinstalling the connector. Failure to properly reinstall the connector can lead to transmission issues (**Fig. 59**) (**249V**).

20. Connect hydraulic hoses to pump inlet and pressure ports. Fill hydraulic tank with recommended hydraulic oil. Follow start up instructions on page 51.

    249V Pump Porting
    Inlet = SAE 24 ORB
    Pressure = SAE 16 ORB

CAUTION: Do NOT start engine with 249V PTO and pump installed unless hydraulic system is connected and filled with oil. Failure to follow these instructions may result in PTO and pump damage.

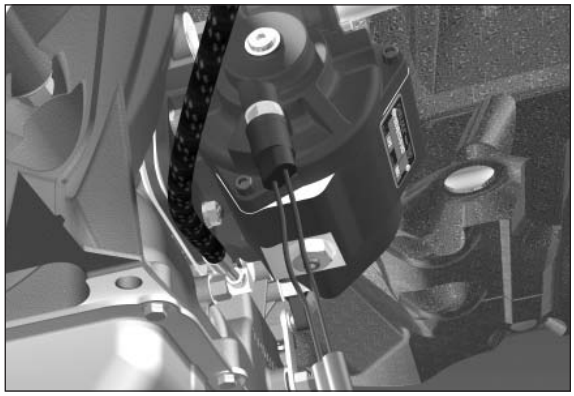

Figure 58

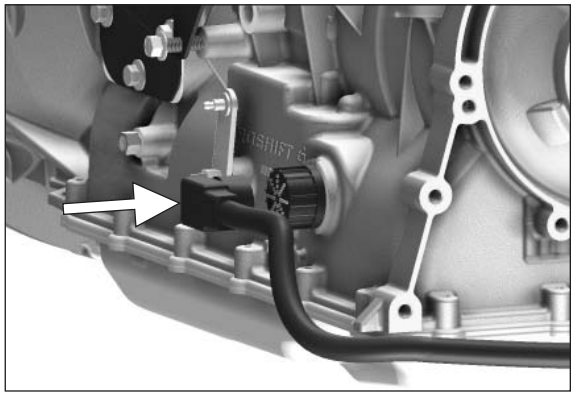

Figure 59

Heat Shield Installation

Instructions for installing the Heat Shield are located in the Appendix on page 75.

Parker Chelsea
Parker Hannifin Corporation
Chelsea Products Division
Olive Branch, MS 38654 USA

Medium Duty F650 – MY2013-MY2015 – 6.8L Gas 249G Special Installation Instructions

Wiring Out Side the Cab – Engine Compartment

1. Route the Chelsea blunt-cut wiring harness along the Ford main wiring harness in the engine compartment fire wall to the Ford blunt-cut SEIC customer access circuits (**Fig. 60**).

2. See pages 44 and 45 for complete blunt-cut wiring instructions.

3. Route the PTO solenoid connection and pressure switch connection wires parallel to the transmission linkage cable.

4. Make sure wiring is clear of driveline and exhaust.


Figure 60

Potentiometer Settings

Charts are located in the Appendix on pages 73-74.										
CHASSIS	**FUEL**	**MY2009**	**MY2010**	**MY2011**	**MY2012**	**MY2013**	**MY2014**	**MY2015**	**MY2016**	**MY2017-MY2018**
Super Duty F250-550	Gas	Chart I	Chart I	Chart I	Chart I	Chart I	Chart I	Chart I	Chart III	Chart IV
	Diesel	Chart I	Chart I	Chart II	Chart II	Chart II	Chart II	Chart II	Chart III	Chart IV
Medium Duty F650/750	Gas				Chart I	Chart I	Chart I	Chart I	Chart III	Chart IV
	Diesel								Chart III	Chart IV

Parker Chelsea
Parker Hannifin Corporation
Chelsea Products Division
Olive Branch, MS 38654 USA

Notes

Parker Hannifin Corporation
Chelsea Products Division
Olive Branch, MS 38654 USA

Hose Assembly Identification Chart
249F

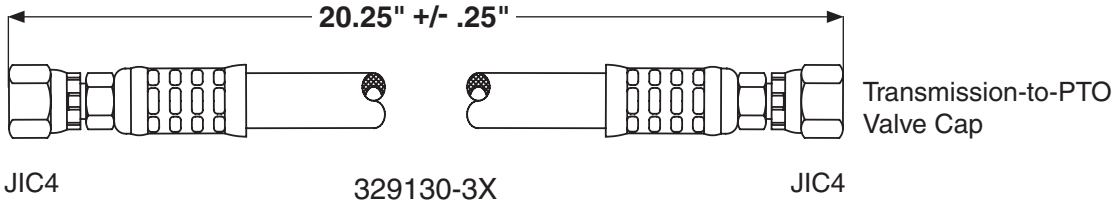

Wiring Installation (Shift Option B)
Super Duty F250-550 – MY2011-MY2018 – 6.7L Diesel
Medium Duty F650/750 – MY2016-MY2018 – 6.7L Diesel
249F w/o Electronic Overspeed Control (EOC)

(SK-490 Rev F)

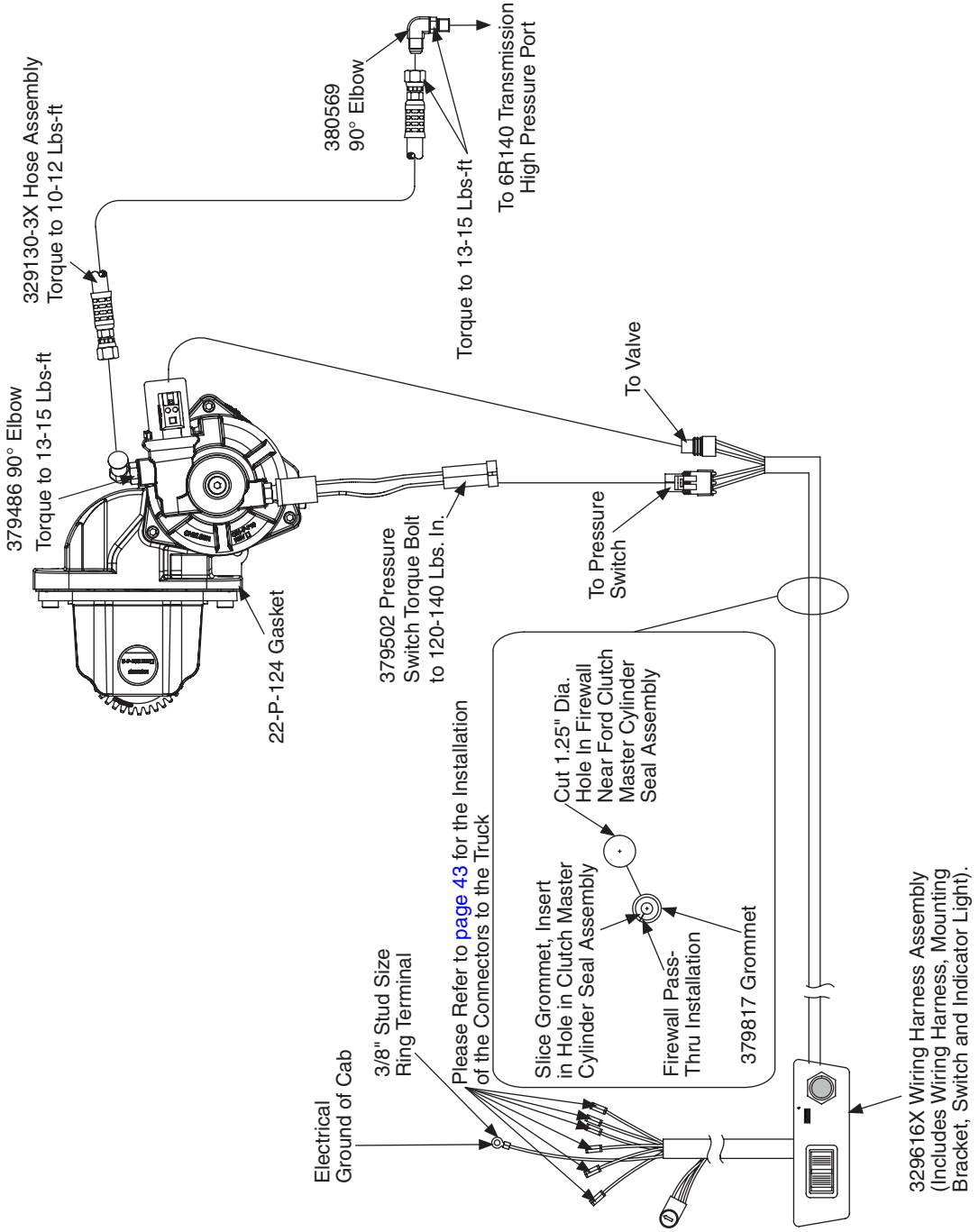

Installation Kits: 329651X (249 Series)
329836X (249V Series)

Parker Chelsea

Parker Hannifin Corporation
Chelsea Products Division
Olive Branch, MS 38654 USA

Wiring Installation Chart (Shift Option B) (SK-490 Rev F)
Super Duty F250-550 – MY2011-MY2018 – 6.7L Diesel
Medium Duty F650/750 – MY2016-MY2018 – 6.7L Diesel
249F w/o Electronic Overspeed Control (EOC)

Super Duty F250-550

Chelsea PTO Wire Harness		2011-2016 - Drive Side behind Data Link 2017-2018 - Passenger Side Kick Panel					
		Stationary Mode			Mobile Mode		
		Function	Ford Wire Color	Circuit	Function	Ford Wire Color	Circuit
329616X Wiring Harness	Purple	12V Power	2011-2016 (2) White/Blue	#CDC64	12V Power	2011-2016 (2) White/Blue	#CDC64
			2017-2018 Green/Orange	#CBP22		2017-2018 Green/Orange	#CBP22
	Yellow	PTO REQ1	Yellow/Green	#CE912	PTO REQ1	NOT USED	#CE912
		PTO REQ2	NOT USED	#CE933	PTO REQ2	Blue/Orange (1)	#CE933
	White	PTO VREF	White/Brown	#LE434	PTO VREF	White/Brown	#LE434
	Green	PTO RPM	Green	#CE914	PTO RPM	Green	#CE914
	Gray	PTO RTN	Gray/Violet	#RE327	PTO RTN	Gray/Violet	#RE327
	Blue/White	PTO RELAY	Blue/White	#CE326	PTO RELAY	Blue/White	#CE326

NOTE:
(1) Early MY2011 Product Units may come with two Blunt Cut Blue/Gray Stripe wires. One wire will be for PTO Function (PTORS2) the other will be a Customer Wire for "Park Only Output" (TRO-P). Refer to Ford Body Builders web site for more on this subject.
(2) For Trucks built after May 15, 2010. Trucks built prior to May 15, 2010 this Ford wire is Yellow/Orange Stripe.
See Appendix for more year specific wiring information.

Medium Duty F650/750

Chelsea PTO Wire Harness		Driver Side behind Data Link					
		Stationary Mode			Mobile Mode		
		Function	Ford Wire Color	Circuit	Function	Ford Wire Color	Circuit
329616X Wiring Harness	Purple	12V Power	Yellow/Gray	#CBB35	12V Power	Yellow/Gray	#CBB35
	Yellow	PTO REQ1	Yellow/Green	#CE912	PTO REQ1	NOT USED	#CE912
		PTO REQ2	NOT USED	#CE933	PTO REQ2	2016 (3) - Blue/Orange	#CE933
						2017-2018 - Blue/Red	#CE933
	White	PTO VREF	White/Brown	#LE434	PTO VREF	White/Brown	#LE434
	Green	PTO RPM	Green	#CE914	PTO RPM	Green	#CE914
	Gray	PTO RTN	Gray/Violet	#RE327	PTO RTN	Gray/Violet	#RE327
	Blue/White	PTO RELAY	Blue/White	#CE326	PTO RELAY	Blue/White	#CE326

NOTE:
(3) Blue w/Orange prior to March 2016. Blue/Red after March 2016.
See Appendix for more year specific wiring information.

Mobile to Stationary Switch

1. If required for your application a Single Pole Double Throw (SPDT) switch can be installed in the cab to control PTO function between Mobile Mode and SEIC Stationary Mode. Connect the Chelsea YELLOW wire as illustrated below.

Switching Between Stationary and Mobile

To switch between Mobile & Stationary Mode – Install a Single Pole Double Throw (SPDT) switch as shown:

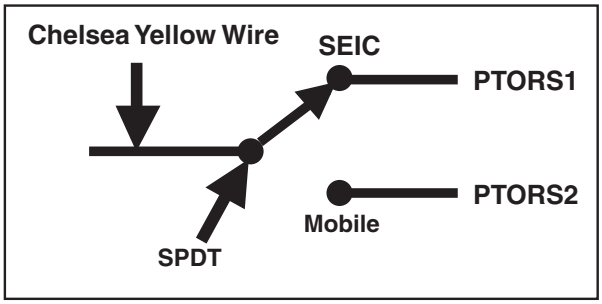

Parker Chelsea
Parker Hannifin Corporation
Chelsea Products Division
Olive Branch, MS 38654 USA

Hose Assembly Identification Chart

249G

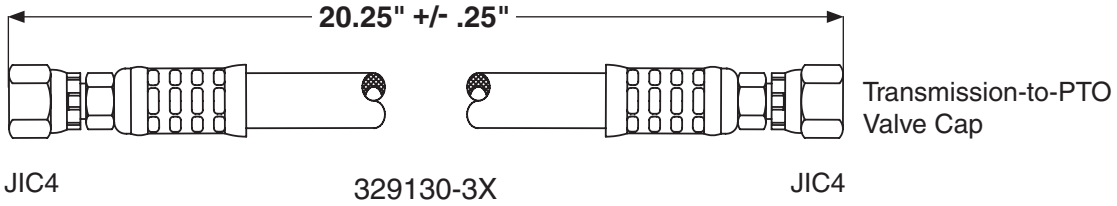

Wiring Installation (Shift Option B)
Medium Duty F650 – MY2013-MY2015 – 6.8L Gas
249G w/o Electronic Overspeed Control (EOC)

(SK-560 Rev D)

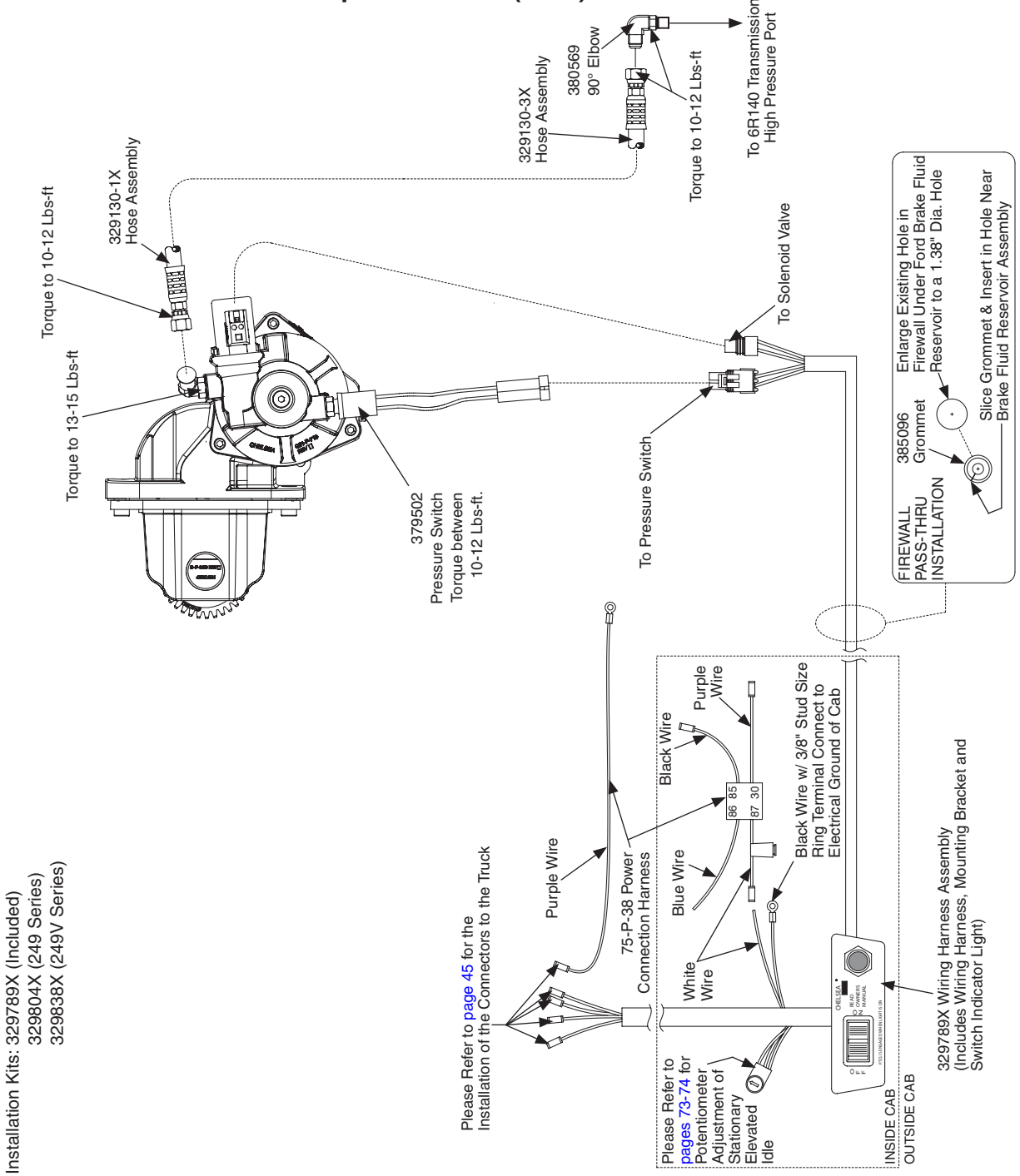

Wiring Installation Chart (Shift Option B) (SK-560 Rev D)
Medium Duty F650 – MY2013-MY2015 – 6.8L Gas
249G w/o Electronic Overspeed Control (EOC)

Wiring Interface Configurations

Chelsea PTO Wire Harness		Stationary Mode (Mobile Mode Not Available)		
		Function	Ford Wire Color	Circuit
75-P-38 Power Connection Harness	**Under Hood**			
	Purple w/ Butt Connector (80")		Violet/Yellow	#870
	Purple w/ Ring Terminal (80")		Battery Junction Box Battery Connection Post	
	Under Dash			
	Black		Ford Ground Circuit Black	#57
	Blue		12V Blue/Green	
	Purple		Violet/Yellow	#870
	White		Chelsea White Wire on 329789X Main Harness	
329789X Main Harness	**Under Hood**			
	Green	PTO RPM	Ford Circuit (Green)	#CE914
	Blue/White	PTO RLY	Ford Circuit (Blue/White)	#CE326
	Blue	PTO REQ2	Blue/Orange or Blue/Red (eff. March 2016)	#CE933
	Yellow	PTO REQ1	Yellow/Green	#CE912
	Under Dash			
	Black w/ Ring Terminal		Chassis Ground In Dash	

See Appendix for more year specific wiring information.

Parker Chelsea
Parker Hannifin Corporation
Chelsea Products Division
Olive Branch, MS 38654 USA

Hose Assembly Identification Chart
249H

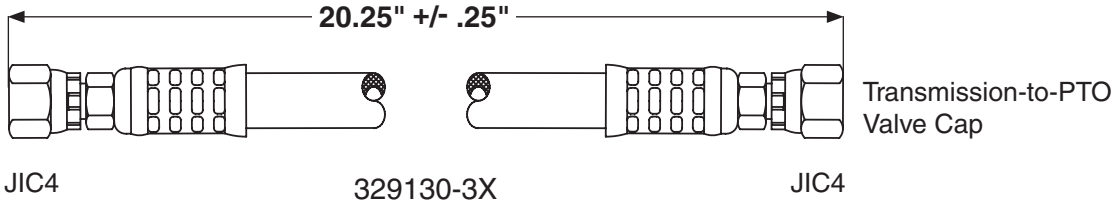

Wiring Installation Chart (Shift Option B)
Super Duty F250-550 – MY2017-MY2018 – 6.2/6.8L Gas
Medium Duty F650/750 – MY2016-MY2018 – 6.8L Gas
249H w/o Electronic Overspeed Control (EOC)

(SK-490 Rev F)

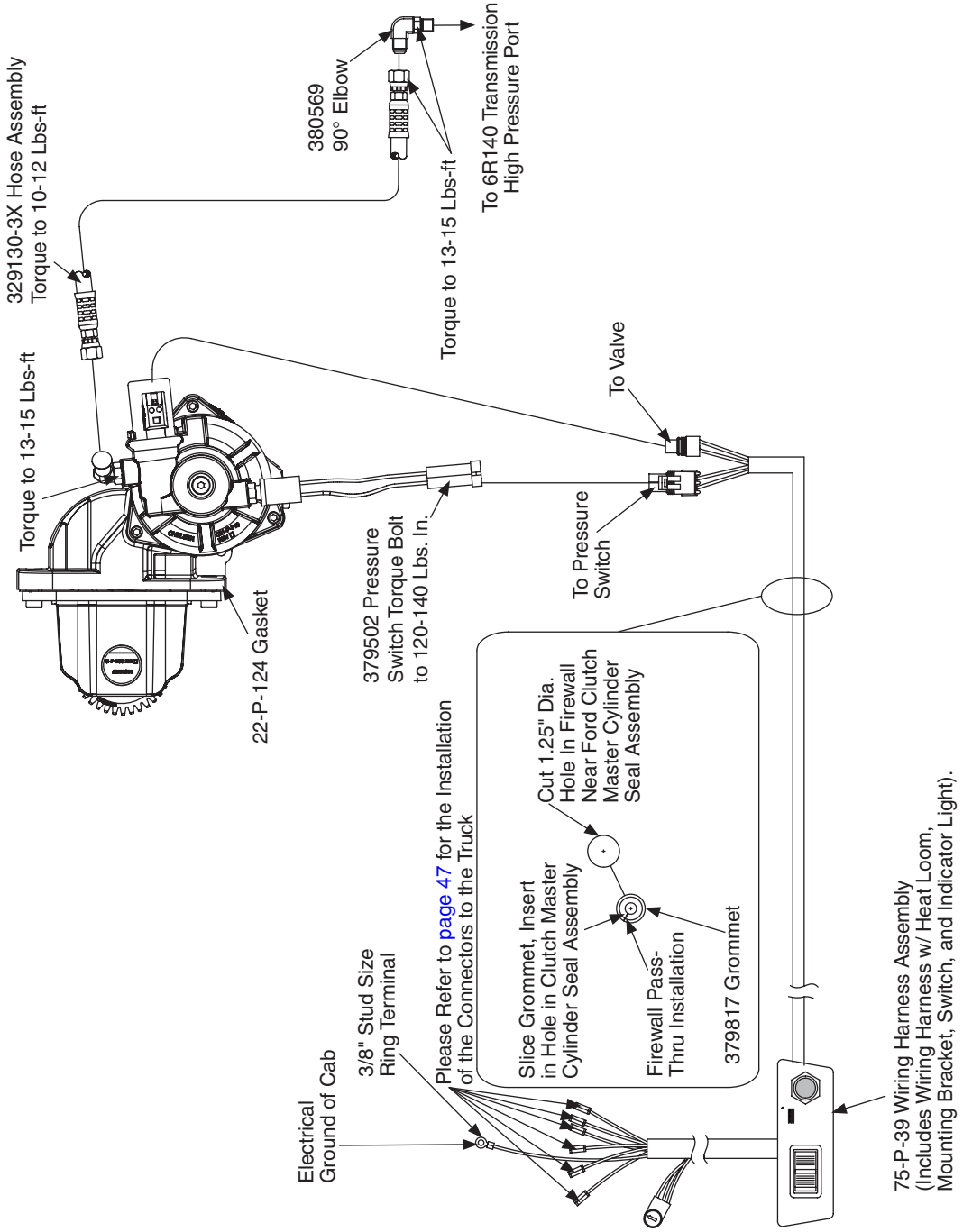

Installation Kits: 329651X (249 Series)
329836X (249V Series)

Parker Chelsea

Parker Hannifin Corporation
Chelsea Products Division
Olive Branch, MS 38654 USA

Wiring Installation Chart (Shift Option B) (SK-490 Rev F)
Super Duty F250-550 – MY2017-MY2018 – 6.2/6.8L Gas
Medium Duty F650/750 – MY2016-MY2018 – 6.8L Gas
249H w/o Electronic Overspeed Control (EOC)

Super Duty F250-550 – (starting w/ MY2017)

Chelsea PTO Wire Harness		Passenger Side Kick Panel					
		Stationary Mode			Mobile Mode		
		Function	Ford Wire Color	Circuit	Function	Ford Wire Color	Circuit
75-P-39 Wiring Harness	Yellow/Gray	12V Power	Green/Orange	#CBP22	12V Power	Green/Orange	#CBP22
	Yellow/Blue	PTO REQ1	Yellow/Green	#CE912	PTO REQ1	NOT USED	#CE912
		PTO REQ2	NOT USED	#CE933	PTO REQ2	Blue/Orange	#CE933
	Yellow/Green	PTO VREF	Yellow/Green	#LE424	PTO VREF	Yellow/Green	#LE424
	Green	PTO RPM	Green	#CE914	PTO RPM	Green	#CE914
	Yellow/Violet	PTO RTN	Yellow/Violet	#RE407	PTO RTN	Yellow/Violet	#RE407
	Blue/White	PTO RELAY	Blue/White	#CE326	PTO RELAY	Blue/White	#CE326

NOTE: The Blue wire in the Chelsea harness is not used in these model year chassis.

Medium Duty F650/750

Chelsea PTO Wire Harness		Driver Side behind Data Link					
		Stationary Mode			Mobile Mode [1]		
		Function	Ford Wire Color	Circuit	Function	Ford Wire Color	Circuit
75-P-39 Wiring Harness	Yellow/Gray	12V Power	Yellow/Gray	#CBB35	12V Power	Yellow/Gray	#CBB35
	Yellow/Blue	PTO REQ1	Yellow/Blue	#CE912	PTO REQ1	NOT USED	#CE912
		PTO REQ2	2016 - Blue/Orange or Red [2]	#CE933	PTO REQ2	2016 - N/A 2017 - Blue/Red	#CE933
	Yellow/Green	PTO VREF	Yellow/Green	#LE424	PTO VREF	Yellow/Green	#LE424
	Green	PTO RPM	Green	#CE914	PTO RPM	Green	#CE914
	Yellow/Violet	PTO RTN	Yellow/Violet	#RE407	PTO RTN	Yellow/Violet	#RE407
	Blue/White	PTO RELAY	Blue/White	#CE326	PTO RELAY	Blue/White	#CE326

NOTE: The Blue wire in the Chelsea harness is not used in these model year chassis.

NOTE: [1] Mobile Mode is not available on the 2016 GAS Trucks.
[2] Blue/Orange prior to March 2016. Blue/Red after March 2016.

See Appendix for more year specific wiring information.

NOTE:
Some early build 2016 6.8L gas F650/750 vehicles have 2 identically colored wires for PTO, which are located in the blunt cut harness under the driver side dash. They are Yellow/Green stripes. Use a voltmeter to identify which circuit you need:

- One wire has 0V to ground (PCM Pin C1551B-84 Circuit #CE912)
- One has +5V to ground (PTO VREF, PCM Pin 01551B-52 Circuit #LE424)
- Circuit CE912 will be changing to Yellow/Blue in later production.

NOTE:
Early build 2016 6.8L gas F650/750 vehicles (built before 10/22/15) have an incorrectly pinned customer access circuit. Circuit #CE326 is pinned in PCM connector #C175B PIN 96. This circuit should be located at PIN 98.

SYMPTOMS:
6.8L gas vehicles built before October 22, 2015 and not entering PTO mode due to circuit #CE326 not going to ground when all enabling conditions are met.

CORRECTIVE ACTION:
Upfitters and body builders who have a 6.8L gas vehicle built before October 22, 2015 and find that SEIC is exhibiting the symptoms above are advised to contact their local Ford Service center for corrective action per TSB 15-0180. The dealer will be able to determine if this TSB is applicable to the vehicle.

Vehicles built after 10/22/15 will have this circuit in the correct PCM connector cavity.

Wiring Installation (Shift Option K)
Super Duty F250-550 – MY2011-MY2018 – 6.7L Diesel
Medium Duty F650/750 – MY2016-MY2018 – 6.7L Diesel
Super Duty F250-550 – MY2017-MY2018 – 6.8L Gas
Medium Duty F650/750 – MY2017-MY2018 – 6.8L Gas
249F/249H w/ Electronic Overspeed Control (EOC)

(SK-489 Rev G)

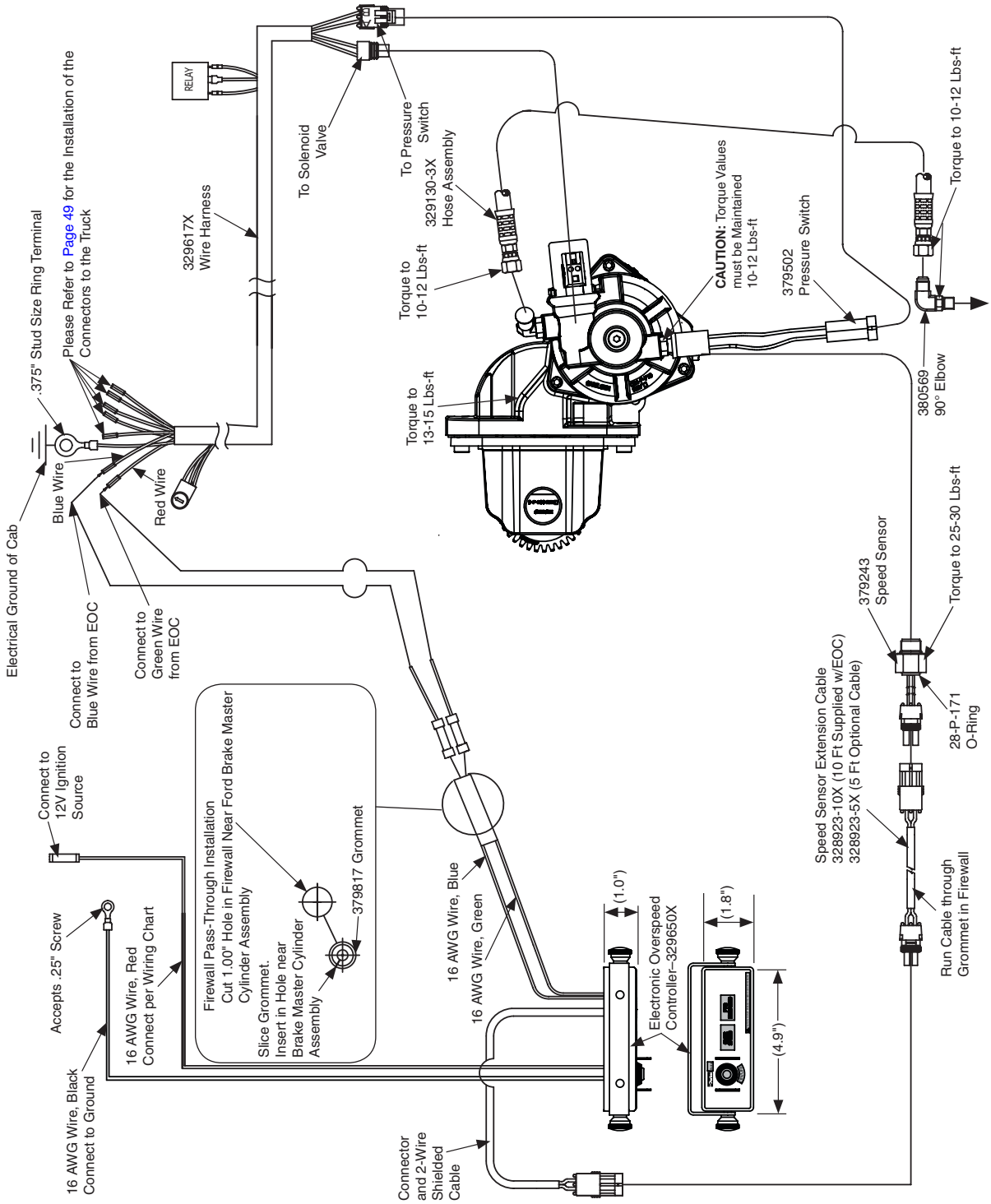

Installation Kits: 329652X (249 Series)
329837X (249V Series)
Wiring Harness: 329617X (Included in Kits)

NOTE: Strip Wire Ends 0.25" Prior to Installing Connector

Parker Chelsea
Parker Hannifin Corporation
Chelsea Products Division
Olive Branch, MS 38654 USA

Wiring Installation Chart (Shift Option K) (SK-489 Rev G)
Super Duty F250-550 – MY2011-MY2018 – 6.7L Diesel
Medium Duty F650/750 – MY2016-MY2018 – 6.7L Diesel
249F w/ Electronic Overspeed Control (EOC)

Chelsea PTO Wire Harness		Stationary Mode			Mobile Mode		
		Function	Ford Wire Color	Circuit	Function	Ford Wire Color	Circuit
329617X Wiring Harness	White	PTO REF	White/Brown	#LE434	PTO REF	White/Brown	#LE434
	Gray	PTO RTN	Gray/Violet	#RE327	PTO RTN	Gray/Violet	#RE327
	Green	PTO RPM	Green	#CE914	PTO RPM	Green	#CE914
	Blue/White	PTO RLY	Blue/White	#CE326	PTO RLY	Blue/White	#CE326
	Black w/Ring Terminal	Chassis Ground in Dash			Chassis Ground in Dash		
	Yellow	PTO REQ1	Yellow/Green	#CE912	PTO REQ2	Blue/Orange (Before March 2016) (1) Blue/Red (After March 2016) (1)	#CE933
	Blue	Chelsea EOC Blue Wire			Chelsea EOC Blue Wire		
	Red	Chelsea EOC Green Wire			Chelsea EOC Green Wire		

NOTE: (1) Early MY2011 Product Units may come with two Blunt Cut Blue/Gray Stripe wires. One wire will be for PTO Function (PTORS2) the other will be a Customer Wire for "Park Only Output" (TRO-P).
NOTE: EOC not available for MY2016 & Prior.
Refer to Ford Body Builders web site for more on this subject.

Wiring Installation Chart (Shift Option K) (SK-489 Rev G)
Super Duty F250-550 – MY2017-MY2018 – 6.8L Gas
Medium Duty F650/750 – MY2017-MY2018 – 6.8L Gas
249H w/ Electronic Overspeed Control (EOC)

Chelsea PTO Wire Harness		Stationary Mode			Mobile Mode		
		Function	Ford Wire Color	Circuit	Function	Ford Wire Color	Circuit
329617X Wiring Harness	White	PTO REF	Yellow/Green	#LE424	PTO REF	Yellow/Green	#LE424
	Gray	PTO RTN	Yellow/Violet	#RE407	PTO RTN	Yellow/Violet	#RE407
	Green	PTO RPM	Green	#CE914	PTO RPM	Green	#CE914
	Blue/White	PTO RLY	Blue/White	#CE326	PTO RLY	Blue/White	#CE326
	Black w/Ring Terminal	Chassis Ground in Dash			Chassis Ground in Dash		
	Yellow	PTO REQ1	Yellow/Green F250-550 Yellow/Blue F650/750	#CE912	PTO REQ2	Blue/Orange (1)	#CE933
	Blue	Chelsea EOC Blue Wire			Chelsea EOC Blue Wire		
	Red	Chelsea EOC Green Wire			Chelsea EOC Green Wire		

NOTE: (1) Early MY2011 Product Units may come with two Blunt Cut Blue w/Gray Stripe wires. One wire will be for PTO Function (PTORS2) the other will be a Customer Wire for "Park Only Output" (TRO-P).
NOTE: EOC not available for MY2016 & Prior.
Refer to Ford Body Builders web site for more on this subject.

12V Power	Stationary Mode or Mobile Mode			
Chelsea EOC Wire	F250-550		F650/750	
	Ford Wire Color	Circuit	Ford Wire Color	Circuit
Red	2011-2016 12V White/Blue (2)	#CDC64	2016-2017 Yellow/Gray	#CBB35
	2017-2018 12V Green/Orange	#CBP22		
Black w/Ring Terminal	Ford Chassis Ground in Dash			

NOTE: (2) For Super Duty Trucks built after May 15, 2010. Super Duty Trucks built prior to May 15, 2010 this Ford wire is Yellow/Orange.
See Appendix for more year specific wiring information.

Parker Chelsea
Parker Hannifin Corporation
Chelsea Products Division
Olive Branch, MS 38654 USA

Mounting CGP-P11 Pumps to PTO

The Parker/Chelsea CGP-P11 pumps listed below have a special pump flange designed to mount the pump to the 249 Series PTO without modifying the pump flange. This allows the same pump to be installed on either 4 x 2 or 4 x 4 applications.

NOTE: Each Chelsea PTO that features a female pump shaft will include a packet of lubricant (part number 379688). Apply this to the male end of the pump shaft before installing the pump to the PTO.

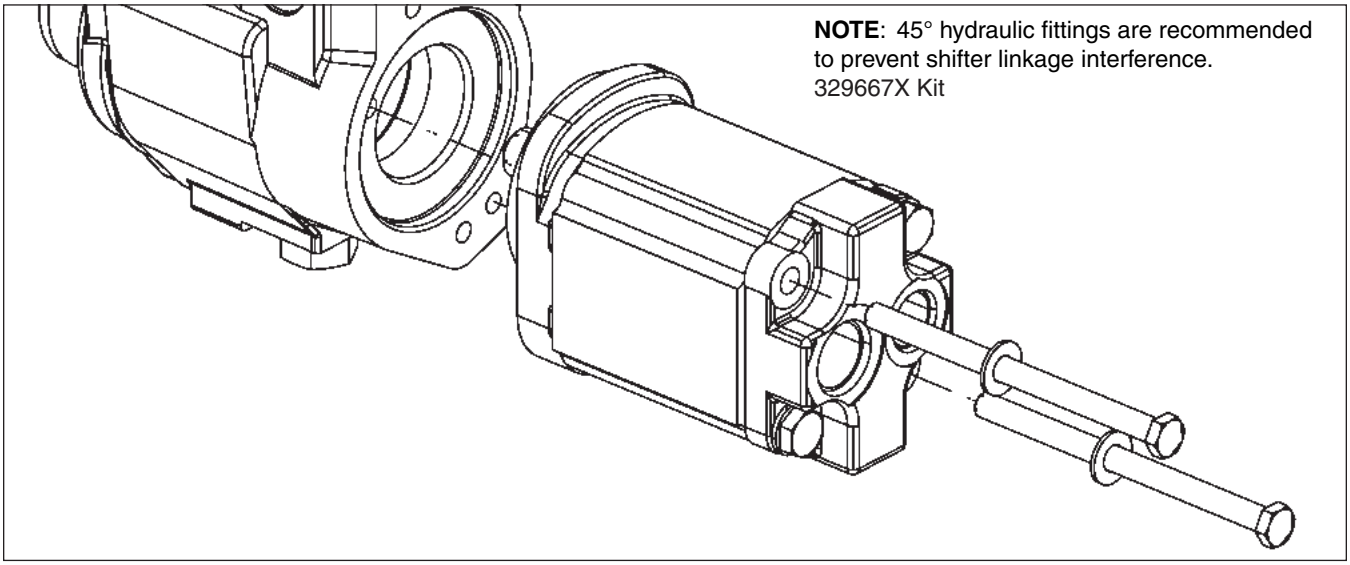

Chelsea CGP-P11 Series Pump Bolt Specifications - 249 Series

Order Code	Chelsea Pump Model	Pump Tag Number	Pump Mounting Kit	Bolt Number 2 per Pump	Bolt Size	Flat Washer (Qty.)
16	CGP-P11A016-5GC	334 9110 027	329418-2X	378431-31	.375"-16 x 4.25"	500365-26 (2)
26	CGP-P11A026-5GC	334 9110 028	329418-3X	378431-32	.375"-16 x 4.50"	500365-26 (2)
32	CGP-P11A032-5GC	334 9110 068	329665-3X	378431-33	.375"-16 x 4.75"	500365-26 (2)
37	CGP-P11A037-5GC	334 9110 029	329665-3X	378431-33	.375"-16 x 4.75"	500365-26 (2)
42	CGP-P11A042-5GC	334 9110 030	329418-6X	378431-34	.375"-16 x 5.00"	500365-26 (2)
55	CGP-P11A055-5GC	334 9110 031	329418-7X	378431-35	.375"-16 x 5.25"	500365-26 (2)
61	CGP-P11A061-5GE	334 9110 097	329418-8X	378431-36	.375"-16 x 5.50"	500365-26 (2)
71	CGP-P11A071-5GE	334 9110 098	329665-7X	378431-37	.375"-16 x 5.75"	500365-26 (2)
82	CGP-P11A082-5GE	334 9110 099	329665-8X	378431-38	.375"-15 x 6.00"	500365-26 (2)
87	CGP-P11A087-5GE	334 9110 100	329665-8X	378431-38	.375"-15 x 6.00"	500365-26 (2)

NOTE: Torque Pump Mounting Bolts between 35-38 lbs-ft [48-52 Nm].

CAUTION: Failure to Torque pump bolts to the correct specifications may result in poor pump performance and/or premature failure.

Start-Up Instructions (249V Series Only)

General

All DENISON by Parker vane pumps & motors are individually tested to provide the best quality & reliability. Modifications, conversions & repairs can only be done by authorized dealers or OEM to avoid invalidation of the guarantee.

The pumps & motors are to be used in the design limits indicated in all the sales bulletins.

Do not modify or work on the pump under pressure or when the engine is on. Qualified personnel are required to assemble and set-up hydraulic devices.

Always conform to regulations (safety, electrical, environment).

The following instructions are important to follow to obtain good service life from the unit.

Rotation & Ports Indication

- The rotation and ports orientation are viewed from the shaft end.
- CW stands for clockwise, right-hand rotation.
- CCW stands for counter-clockwise, left-hand rotation.

Start-Up Check-Up

Check that the assembly of the power unit is correct:
The distance between the suction pipe & the return lines in the tank should be as great as possible.

A bevel on both suction & return lines is recommended to increase the surface and so lower the velocity. We suggest a 45° minimum angle.

Velocities : inlet $0.5 < x < 1.9$ m/s (164 < x < 6.23 ft per sec.)
: return $x < 6$ m/s (x < 19.7 ft per sec.)
: Always insure that all return and suction lines are under the oil level to avoid forming aeration or vortex effect. This should be done under the most critical situation (all cylinders extended for example). Straight and short pipes are the best.

$$V = \frac{Q\ (Lpm)}{6 \times \pi \times r^2\ (cm)} = m/s \qquad V = \frac{Q\ (GPM)}{3.12 \times \pi \times r^2\ (in)} = ft/s$$

The size of the air filter should be 3 times greater than the max. instant return flow (all cylinders in movement for example).

DENISON does not recommend inlet strainers. If needed, a 100 mesh (149 microns) is the finest mesh recommended.

Make sure that all protective plugs & covers have been removed.

Start-Up Instructions (249V Series Only) (Continued)

Start-up:

- The tank has been filled up with a clean fluid in proper conditions.
- Flushing the system with an external pump prior to the start-up is good.
- To allow a good priming of the pump, the air should be bled off.
- The first valve on the circuit should be open to tank.
- Air bleed off valves are available on the market place.
- It is possible to bleed off the air by creating a leak in the P port of the pump.

WARNING: This has to be done in low pressure mode as it could create a dangerous fluid leak. Make sure that the pressure cannot rise (open center valve to tank, pressure relief valve unloaded).

- When oil free of air appears, tighten the connectors to the correct torque.
- The pump should prime within a few seconds. If not, please read the troubleshooting guide (pages 59-62).
- If the pump is noisy, please troubleshoot the system.
- Never operate the pump at top speed and pressure without checking the completion of pump priming.

Model Code	Chelsea Number	Displacement in³/rev	GPM (D)	Pump (D) HP	Torque (D) Ft. Lbs.	Max Pressure PSI		Speed RPM		Max Speed RPM
						Intermittent	Continuous	Min.	Max	Engine (B)
08	380418-08	1.61	9.33	19	67	4000	3500	400	2880	2015
10	380418-10	2.08	12.06	25	87	4000	3500	400	2880	2015
12	380418-12	2.26	13.10	27	94	4000	3500	400	2880	2015
14	380418-14	2.81	16.29	33	117	4000	3500	400	2880	2015
17	380418-17	3.56	20.64	42	149	4000	3500	400	2880	2015
20	380418-20	3.89	22.55	46	163	4000	3500	400	2880	2015
22	380418-22	4.29	24.87	51	179	4000	3500	400	2880	2015
25	380418-25	4.84	28.06	57	202	4000	3500	400	2880	2015

(A) GPM & Pump Input HP @ **1200 Engine RPM (1488 PTO Output RPM - 124% Ratio)** & Continuous Pressure Rating with **90% efficiency rating** considered.
(B) Max Engine Speed = (Max Pump Speed) / (1.24) for PTO Ratio Increase. Max Speed determined by Max PTO output speed of 2500.
(D) GPM & Pump Input HP @ **1200 Engine RPM (1488 PTO Output RPM - 124% Ratio)** & 2000 PSI Continuous Pressure Rating.
See leakage chart for additional flow losses at other pressures.

CAUTION: 249V Pump Options: The PTO drive gear delivers up to 250 Lbs. ft. torque to the aftermarket PTO, and can manage the heat of 60 HP continuously. Higher horsepower can be delivered, but for shorter durations depending on the amount of power required. Ref: Ford Body Builders Manual; TorqShift Automatic Transmission.

NOTE: Refer to Chelsea Owner's Manual HY25-1FRD-M1/US for complete vane pump information.

FORMULAS:
GPM = Cu. In. x .004329 = G/Rev x 1488 RPMs x .90 efficiency
HP = (GPM x Max PSI) / 1714
Torque = (HP x 5252) / 1488 RPMs

This symbol warns of possible personal injury.

Parker Hannifin Corporation
Chelsea Products Division
Olive Branch, MS 38654 USA

Start-Up Instructions (249V Series Only) (Continued)

Hydraulic Fluid Recommendations

Minimum Inlet Pressure

Please read the charts in the sales leaflets as the minimum requested inlet pressure varies versus the displacement and the speed. Never go under 0.8 bar Absolute (-0.2 bar relative) 11.6 PSI Absolute (-2.9 PSI G).

Maximum Inlet Pressure

It is recommended to always have at least 1.5 bar (22 PSI) differential between inlet and outlet. Standard shaft seals are limited to 0.7 bar (10 PSI G) but some allow 7 bar (100 PSI G).

Minimum Allowable Inlet Pressure (PSI Absolute)

Cartridge Size	Pump Speed RPM						
	1200	1500	1800	2100	2200	2300	2500
08	11.6	11.6	11.6	11.6	11.6	12.3	13.7
10	11.6	11.6	11.6	11.6	11.6	12.3	13.7
12	11.6	11.6	11.6	11.6	11.6	12.3	13.7
14	11.6	11.6	11.6	11.6	11.6	12.3	13.7
17	11.6	11.6	11.6	11.6	12.3	13.0	13.7
20	11.6	11.6	11.6	11.6	12.3	13.0	13.7
22	11.6	11.6	11.6	12.3	13.0	13.0	14.2
25	11.6	11.6	11.6	13.0	13.7	13.7	15.2

Inlet pressure is measured at inlet flange with petroleum base fluids at viscosity between 60 and 300 SUS.
The difference between inlet pressure at the pressure at the pump flange and atmosphere pressure must not exceed 2.9 PSI to prevent aeration.

Multiply absolute pressure by 1.25 for HF-3, HF-4 fluid by 1.35 for HF-5 fluid by 1.10 for ester or rapeseed base

Minimum Outlet Pressure

It is recommended to always have at least 1.5 bar (22 PSI) differential between inlet and outlet.

Fluids:

DENISON Classifications

Types of fluids: For all types of fluids, DENISON's products have different pressures, speeds & temperature limits. Please refer to the sales leaflets for a DENISON T6C Vane Pump.

HF-0 = Anti-wear petroleum base.
HF-1 = Non anti-wear petroleum base.
HF-2 = Anti-wear petroleum base.
HF-3 = Water-in-oil invert emulsions.
HF-4 = Water glycol solutions.
HF-5 = Synthetic fluids.

Filtration Recommendations

NAS 1638 class 8 or better.
ISO 18 / 14 or better.

Inlet strainers: DENISON does not recommend inlet strainers. If requested, a 100 mesh (149 microns) is the finest mesh recommended.

Start-Up Instructions (249V Series Only) (Continued)

Hydraulic Fluid Recommendations (Continued)

Recommended Fluids

Petroleum based antiwear R & O fluids. These fluids are the recommended fluids for pumps & motors. Maximum catalog ratings and performance data are based on operation with these fluids. These fluids are covered by DENISON Hydraulics HF-0 and HF-2 specifications.

For optimum performance, Chelsea recommends Parker DuraClean™ Premium Hydraulic Fluid available from Parker Hydraulic Filter Division. For more information about DuraClean, visit www.Parker.com or contact Hydraulic Filter Division by email at HFDinsidesales@parker.com.

Acceptable Alternate Fluids

The use of fluids other than petroleum based antiwear R & O fluids requires that the maximum ratings of the pumps will be reduced. In some cases the minimum replenishment pressures must be increased.

Viscosity

	Mobile	**Industrial**
Max. (cold start, low speed & pressure)	2000 cSt - 9400 SUS	860 cSt - 3900 SUS
Max. (full speed & pressure)	108 cSt - 500 SUS	108 cSt - 500 SUS
Optimum (max. life)	30 cSt - 140 SUS	30 cSt - 140 SUS
Min. (full speed & pressure for HF-1, HF-3, HF-4 & HF-5 fluids)	18 cSt - 90 SUS	18 cSt - 90 SUS
Min. (full speed & pressure for HF-0 & HF-2 fluids)	10 cSt - 60 SUS	10 cSt - 60 SUS

Viscosity Index

90 min. Higher values extend the range of operating temperatures.

Temperatures

The usual limiting factor of temperature (low or high) comes from the obtained viscosity. The seals are sometimes the limit: standard seals range from -30° C to 90° C (-9.4° F to 194° F).

Maximum fluid temperature (Ø)	**° C**	**° F**
HF-0, HF-1, HF-2	+100	+212
HF-3, HF-4	+50	+122
HF-5	+70	+158
Biodegradable fluids (esters & rapeseed base)	+65	+149
Minimum fluid temperature (Ø) (also depend on max. viscosity)	**° C**	**° F**
HF-0, HF-1, HF-2, HF-5	-18	-0.4
HF-3, HF-4	+10	+50
Biodegradable fluids (esters & rapeseed base)	-20	-4
Over or under these values, please contact DENISON.		

Water Contamination in the Fluid

Maximum acceptable content of water:

- 0.10 % for mineral base fluids.
- 0.05 % for synthetic fluids, crankcase oils, biodegradable fluids.

If the amount of water is higher, then it should be drained off the circuit.

Start-Up Instructions (249V Series Only) (Continued)

Pump & Cartridge Breakdown Drawing

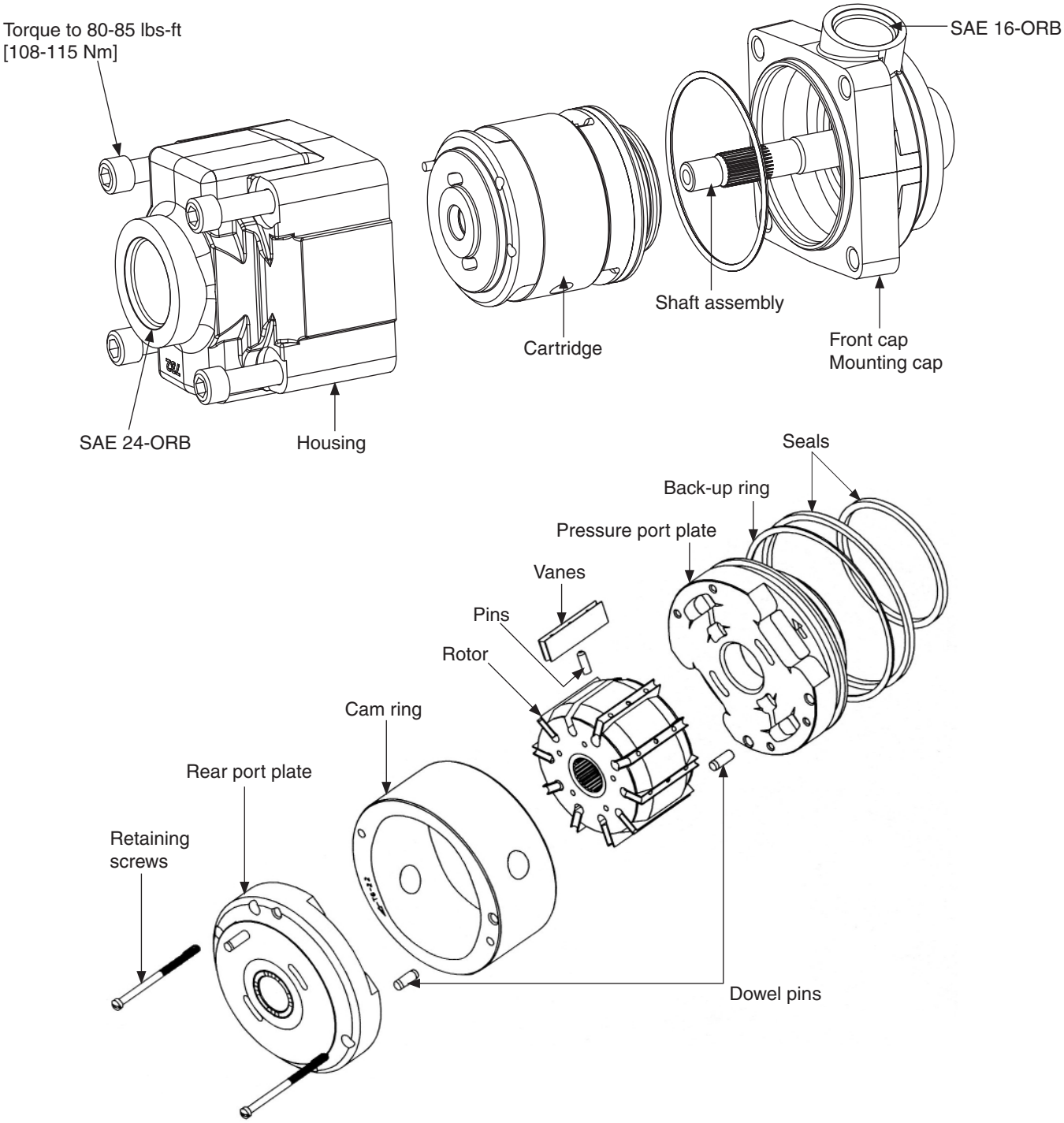

WARNING: The purpose of the two screws is just to hold the cartridge together. When tightening them, check the rotation of the rotor & vane assembly.

This symbol warns of possible personal injury.

Parker Chelsea
Parker Hannifin Corporation
Chelsea Products Division
Olive Branch, MS 38654 USA

Start-Up Instructions (249V Series Only) (Continued)

Cartridge Replacement

Removal

1. Lay the PTO/Pump on the table (**Fig. 61**).

NOTE: PTO must be supported on table.

Figure 61

2. Unscrew the 4-Bolts (**Fig. 62**).

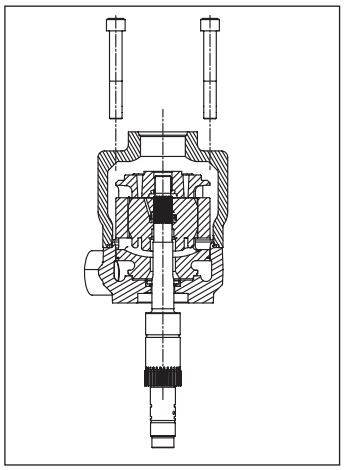

Figure 62

3. Remove the housing (**Fig. 63**).

WARNING: This seal can sometimes stay in the housing.

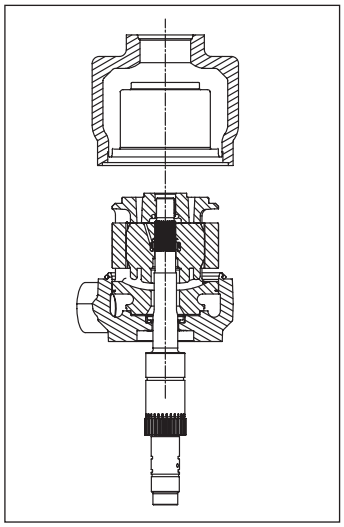

Figure 63

This symbol warns of possible personal injury.

Parker Hannifin Corporation
Chelsea Products Division
Olive Branch, MS 38654 USA

Start-Up Instructions (249V Series Only) (Continued)

Cartridge Replacement (Continued)

4. Disassemble the cartridge / front cap with an extractor (**Fig. 64**).

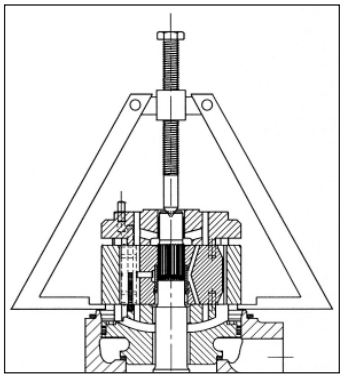

Figure 64

5. Remove cartridge from shaft (**Fig. 65**).

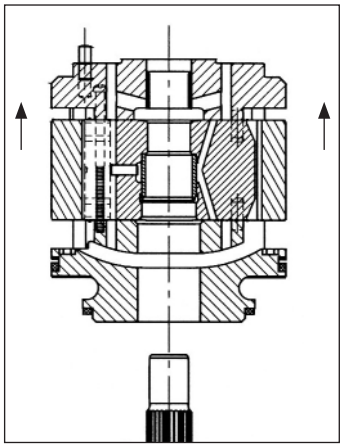

Figure 65

WARNING: If you want to reassemble a new cartridge (**Fig. 66**).

Installation

6. Fit the cartridge into the housing (**Fig. 66**).

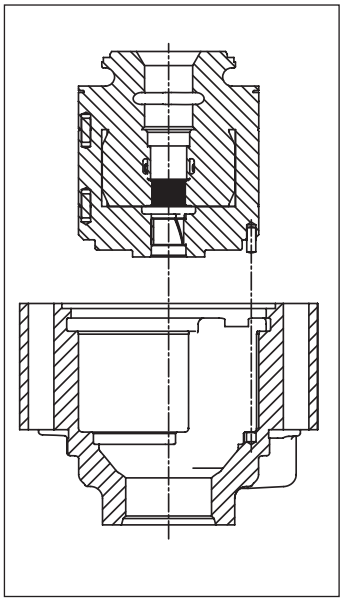

Figure 66

This symbol warns of possible personal injury.

Parker Chelsea
Parker Hannifin Corporation
Chelsea Products Division
Olive Branch, MS 38654 USA

Start-Up Instructions (249V Series Only) (Continued)

Cartridge Replacement (Continued)

7. Check if the dowel pin is in its position in the housing by trying to rotate the cartridge (**Fig. 67**).

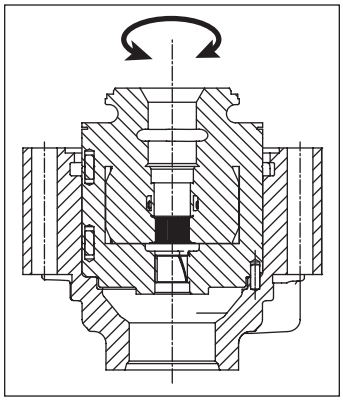

Figure 67

WARNING: Put some grease on the seals to prevent them from moving. If the cartridge does rotate, the dowel pin is not in the hole. Take the cartridge out and try again.

If the cartridge does not fit in the housing correctly, check the concentricity of the three elements = port plates (rear & pressure) & cam ring.

WARNING: Never use a hammer. The cartridge is to fit into the housing without any tools (**Fig. 68**).

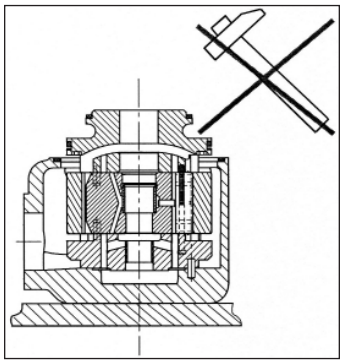

Figure 68

8. Assemble the front cap ass'y on the housing & cartridge ass'y (**Fig. 69**).

WARNING: Position the shaft / front cap ass'y only if the cartridge is well positioned, dowel pin in the housing dowel pin hole. Put some grease on the seals to prevent them from moving.

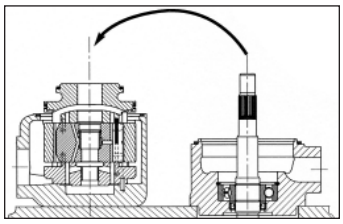

Figure 69

9. Final ass'y (**Fig. 70**).

   a. Always check if the shaft rotates freely. If not, disassemble and go back to the previous step.

   b. Flip/rotate the pump to fit the 4 screws.

   c. Fix the pump to thePTO before tightening the pump's bolts.

   d. Check the porting configuration.

   e. Tighten the 4-Bolts. Step by step to avoid damaging the seals (**Fig. 71**).

   f. Always check if the shaft rotates freely. If not, disassemble and go back to the previous step.

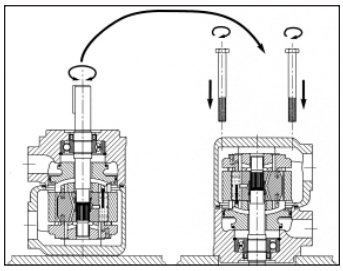

Figure 70

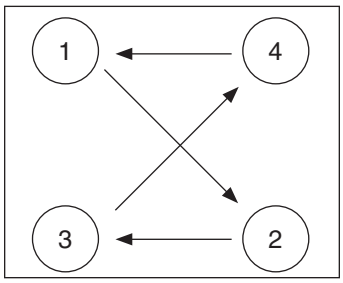

Figure 71

Torque Requirements.

80-85 lbs-ft	108-115 Nm

This symbol warns of possible personal injury.

Parker Hannifin Corporation
Chelsea Products Division
Olive Branch, MS 38654 USA

Vane Pump Troubleshooting Guide

1. No flow, no pressure
   a. Is the pump rotating?
      a-1. Check if the coupling is rotating. If not, check the rotation of the electric motor.
      a-2. Check the keys of the pump and E motor shaft.
      a-3. Check if the shaft is not broken.

   b. Is the rotation in the correct direction?
      b-1. Check if the rotation of the pump corresponds to the arrow on the name plate.
      b-2. Check if the wiring of the electric motor is correct.

   c. Is the air bleed-off done?
      c-1. Check that no air is still located in the pressure line. Loosen a connector.

   d. How are the inlet conditions?
      d-1. Check if the inlet gate valve is not closed.
      d-2. Check the oil level.
      d-3. Check if the inlet hose in the tank is under the oil tank level.
      d-4. Check if an air intake is not disturbing the inlet (missing inlet flange seal, air trapped in suction line as examples).
      d-5. Check if the pump is not located too high above the oil level.
      d-6. Check if the tank is not completely sealed. Then the lack of atmospheric pressure will not allow the pump to prime.
      d-7. Check if all connections and seals are air-tight.

   e. Is the Viscosity not too high?
      e-1. Check if the oil characteristics are not incompatible with the temperature and the pumps requirements. Too high Viscosity will "stick" the vane fluid and enable the pump to suck the oil correctly.

   f. Is the pump flow not going somewhere else?
      f-1. Check the hydraulic circuit and the main sequences. Doing so, you will check if all the valves are set or work properly.
      f-2. Check if the main relief valve is not set at an extremely low pressure and therefore bringing all the flow back to the tank.
      f-3. Check if in the directional valves the spools are not sticking in a position that brings the flow back to the tank.
      f-4. Check if the check valve is not mounted "upside down".

   g. Is the receptor working correctly?
      g-1. Check if the motor does not let all the flow leak internally.
      g-2. Check if the cylinder inner seals are not ruined.

   h. Is the speed high enough?
      h-1. Check if the minimum speed is reached. Mobile pumps require 400 RPM and industrial pumps require 600 RPM.

Vane Pump Troubleshooting Guide (Continued)

2. Not enough flow (or not the flow required)
   a. Are the components OK?
      a-1. Check the displacement of the pump.
      a-2. Check if the speed of the pump is not too low or too high (E motor or thermic engine sized too small so dropping the speed too low).
      a-3. Check if the main relief valve is not set at an extremely low pressure and therefore venting some flow back to the tank.
      a-4. Check if in the directional valves the spools are not sticking in a position that brings part of the flow back to the tank.
      a-5. Check if the hydraulic motor is not leaking internally due to a bad efficiency, low viscosity.
      a-6. Check if the cylinder inner seals are not ruined and therefore allow internal leakage.

   b. Is the connection from the tank to the pump correct?
      b-1. Check if there is no air intake between the pump and the inlet pipe (bad seals for example).
      b-2. Check if the inlet hose is convenient for the required velocity (0,5 < V < 1,9 m/s).
      b-3. Check if the pump is not too high compared to the oil level or if the pump is not too far from the tank (check the inlet absolute pressure with the catalog values).
      b-4. Check if the gate valve is not semi-open.
      b-5. Check if the inlet strainer is sized correctly (250 m mesh mini.) or not clogged.

   c. Is the tank design correct?
      c-1. Check if the oil level is correct.
      c-2. Check if the suction pipe is under the oil level during the complete cycle of the machine.
      c-3. Check if the inlet hose fitted in the tank is cut with an angle wider than 45°.
      c-4. Check if this inlet hose is not too close to the tank wall or to the bottom of the tank and therefore limits the "vane flow".
      c-5. Check if the suction hose is not located near the return line and therefore sucking a lot of air coming from these turbulences.
      c-6. Check if baffles are required to allow correct aeration of the fluid.
      c-7. Check if the air filter is not clogged or undersized (not well dimensioned).
      c-8. Check if the tank is not fully tight, not allowing the atmospheric pressure to apply.

   d. Is the oil convenient?
      d-1. Check if the oil characteristics are not incompatible with the pumps requirements.
      d-2. Check if the viscosity is not too high, therefore "sticking" some vanes in the rotor or blocking the vane fluid.
      d-3. Check if the high temperature does not destroy the viscosity of the fluid. Doing so, the internal leakage will "consume" the flow.

Vane Troubleshooting Guide (Continued)

3. No pressure
   a. Is the hydraulic circuit correctly designed?
      a-1. Check the hydraulic circuit schematic.

   b. Is the circuit correctly piped?
      b-1. Compare the schematic to the piped circuit.

   c. Are the components working properly?
      c-1. Check the main sequences. Doing so, you will check if all the valves are set or work properly.
      c-2. Check if the main relief valve is not set at an extremely low pressure and therefore bringing all the flow back to the tank.
      c-3. Check if in the directional valves the spools are not sticking in a position that brings the flow back to the tank.

4. Not enough pressure
   a. Check as when "no pressure" 3.

   b. Is the system well dimensioned?
      b-1. Check if the flow required is not over the available flow and therefore cannot build-up pressure.

   c. Is there an internal leakage somewhere that maintains a certain pressure?
      c-1. Check all the possible faulty components, from the pump to all the receptors and intermediates (high pressure seals, mechanical wear).

5. Uncommon noise level
   a. Is the noise coming from the pump?
      a-1. Check the mechanical link of the pump shaft: alignment, balancing of the coupling or Universal joint, key properly fastened.
      a-2. Check if the air bleed has been done correctly.
      a-3. Check if there is no air intake from the tank to the pump (nor through the shaft seal).
      a-4. Check if the hose strain force does not create this noise.
      a-5. Check if the oil level is correct.
      a-6. Check if the oil in the tank is not aerated.
      a-7. Check if the strainer is not clogged or under-dimensioned.
      a-8. Check if the inlet pipe is under the oil level.
      a-9. Check if the air filter is not clogged or too small.
      a-10. Check if the speed is not incompatible with the catalog values.
      a-11. Check if the oil is compatible with the catalog recommendations.
      a-12. Check if the inlet pressure is not higher than the outlet pressure.

   b. Is the noise coming from the surroundings?
      b-1. Check the hoses and see if the noise in not coming back to the pump this way.
      b-2. Check the pressure piping and see if its length dumps or amplifies the noise.
      b-3. Check if the structure of the tank is stiff enough to avoid amplification / resonance.
      b-4. Check the E motor fan.
      b-5. Check the balancing of the E motor.
      b-6. Check the water cooler and its theoretical limits.
      b-7. Check the filtration unit, its capacity and if the noise does not come from the opened by-pass valve.

Vane Troubleshooting Guide (Continued)

6. Unusual heat level
   a. Does the heat appear when the pump is running without pressure?
      a-1. Check the oil level and the suction pipe. Is the oil coming to the pump (check the length of the pipe, its internal diameter, all that could influence the inlet pressure)?
      a-2. Check if the air bleed has been done correctly.
      a-3. Check if the flow versus the volume of oil in the tank is correct to obtain a good cooling effect.
      a-4. Check if a cooler is required or, if there is one, if it is well dimensioned.
      a-5. If there is a cooler, check if it is working (example for water cooler: is the water flow open or sufficient).
      a-6. Check if the hydraulic circuit is not bringing back the flow directly to the inlet port. Doing so, it would create a very small closed circuit not able to cool down the fluid.
      a-7. Check the quality of the fluid.
      a-8. Check the velocity of the fluid.
      a-9. Check the filtration unit, its capacity and if the heat does not come from the open by-pass valve or if it is under-dimensioned (bigger delta P).

   b. Does the heat appear when the pump is running with pressure?
      b-1. Check the viscosity.
      b-2. Check the pressure rating.
      b-3. Check if the cooler is working correctly or well dimensioned.
      b-4. Check if the relief valve is not creating this heat because always open.
      b-5. Check if any other component in the system is not creating this heat due to an internal defect.
      b-6. Check if there is a big temperature differential between the inlet and the outlet.

7. Shaft seal leakage
   a. Is the seal destroyed?
      a-1. Check the alignment and the correct power transmission (non homokinetic movement, high radial force as examples).
      a-2. Check the inlet pressure and compare it to the catalog values.
      a-3. Check if the bad suction conditions do not create a vacuum that could even reverse the seal lip.
      a-4. Check if the external environment is not too dirty and therefore ruining the seal.

   b. Is the seal only leaking?
      b-1. Check the alignment of the front shaft and check if there is not any radial load.
      b-2. Check if seal lip has not been cut during a maintenance operation.
      b-3. Check if the inlet pressure is not over or under the catalog values. This has to be done for the whole cycle because the inlet pressure can vary from time to time.
      b-4. Check if the seal material has not been modified because of a too warm environment. The seal can vulcanize and stop sealing correctly.
      b-5. Check the acidity of the oil that can "burn" the seals material. It will therefore destroy the elasticity of the sealing.
      b-6. Check if the chosen seal (high pressure seal for example) is not too stiff for the use. If the environment requires some elasticity due to a gentle misalignment, a high pressure seal will not be able to follow the movement and therefore leak.

272-FORD

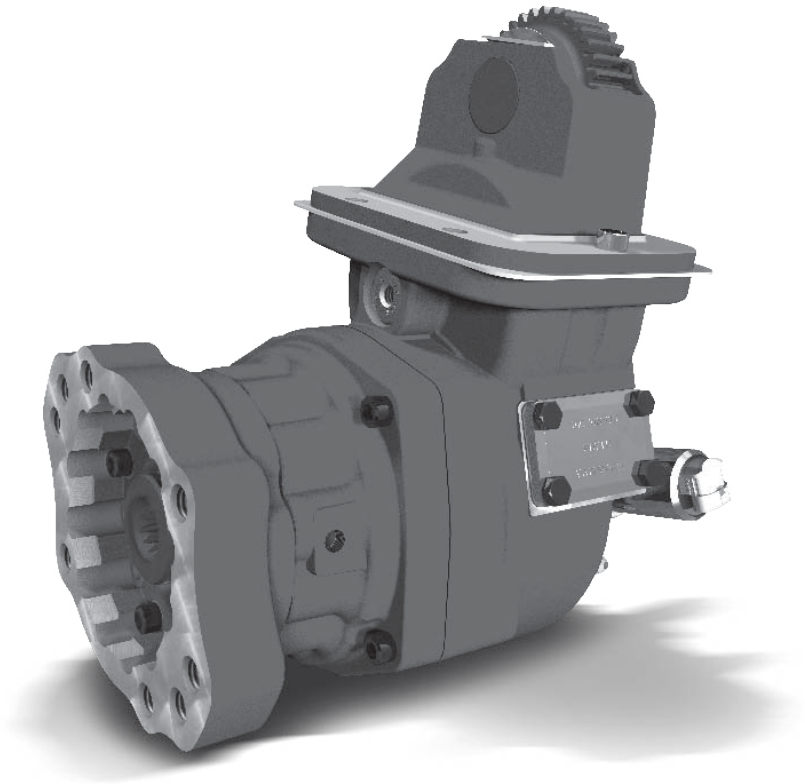

FORD TorqShift® 6R140 Transmission

Medium Duty F650/750
6.7L Diesel MY2016-MY2018
6.8L Gas MY2016-MY2018

Parker Chelsea

Parker Hannifin Corporation
Chelsea Products Division
Olive Branch, MS 38654 USA

Mounting the PTO

1. Remove the PTO aperture cover plate (**Fig. 72**).

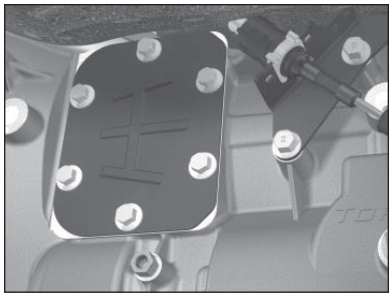
Figure 72

2. Discard the cover plate and set gasket aside. Ensure aperture surface is clean (**Fig. 73**).

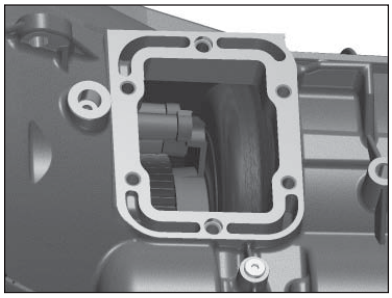
Figure 73

3. Install the studs (**Fig. 74**) hand tight in the PTO aperture pad using a stud driver. Do not use air tools to install studs.

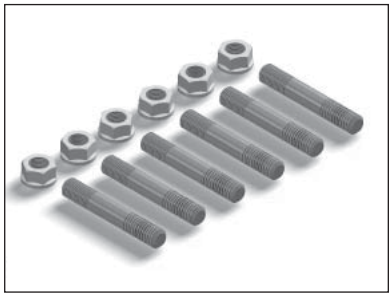
Figure 74

CAUTION: Over tightening of the studs or running the shoulder past the transmission mounting surface may damage stud and/or transmission threads (**Fig. 75**).

NOTE: Do not use gasket maker or sealant with automatic transmissions. Always check to be sure that the studs do not interfere with transmission gears.

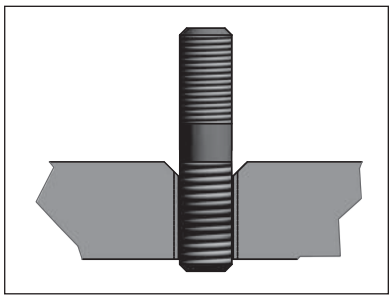
Figure 75

4. Slide the gasket supplied with the transmission over the dowels on to the geared adapter.

5. Install the geared adapter into the transmission aperture over the studs (**Fig. 76**).

6. Install the gasket supplied with the PTO over the studs and against the geared adapter (**Fig. 76a**).

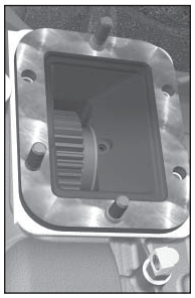
Figure 76

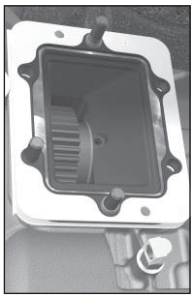
Figure 76a

Parker Chelsea
Parker Hannifin Corporation
Chelsea Products Division
Olive Branch, MS 38654 USA

Mounting the PTO (Continued)

7. Install the PTO over the studs and secure the PTO with the self-locking nuts provided with the PTO (**Fig. 77**).

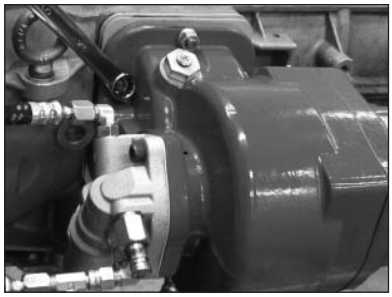

Figure 77

NOTE: Self-locking nuts do not require lock washers (**Fig. 78**).

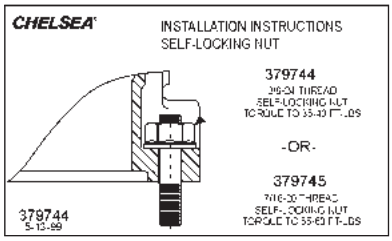

Figure 78

8. Torque the self-locking nuts in a crossing pattern to their proper specifications (**Fig. 79**).

TORQUE SPECS:

Self-Locking Nuts - 35-40 lbs-ft [47-54 Nm]

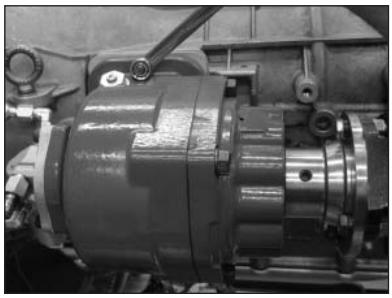

Figure 79

Hose Assembly Identification

329130-9X

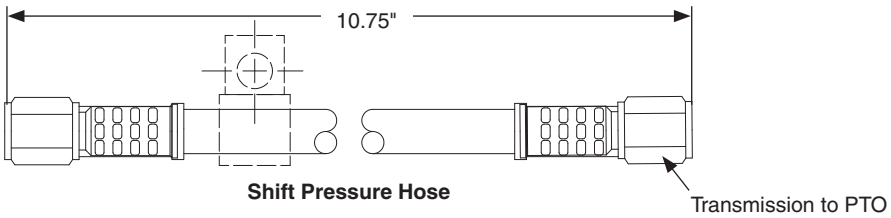

329130-1X

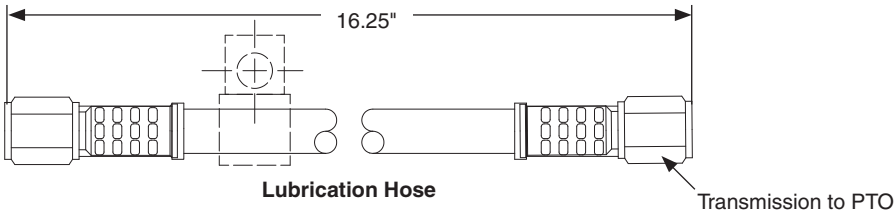

Parker Hannifin Corporation
Chelsea Products Division
Olive Branch, MS 38654 USA

Wiring Chart (Shift Option B)
Medium Duty F650/750 – MY2016-MY2018 – 6.7L Diesel
Medium Duty F650/750 – MY2016-MY2018 – 6.8L Gas
272F & 272H w/o Electronic Overspeed Control (EOC)

(SK-611)

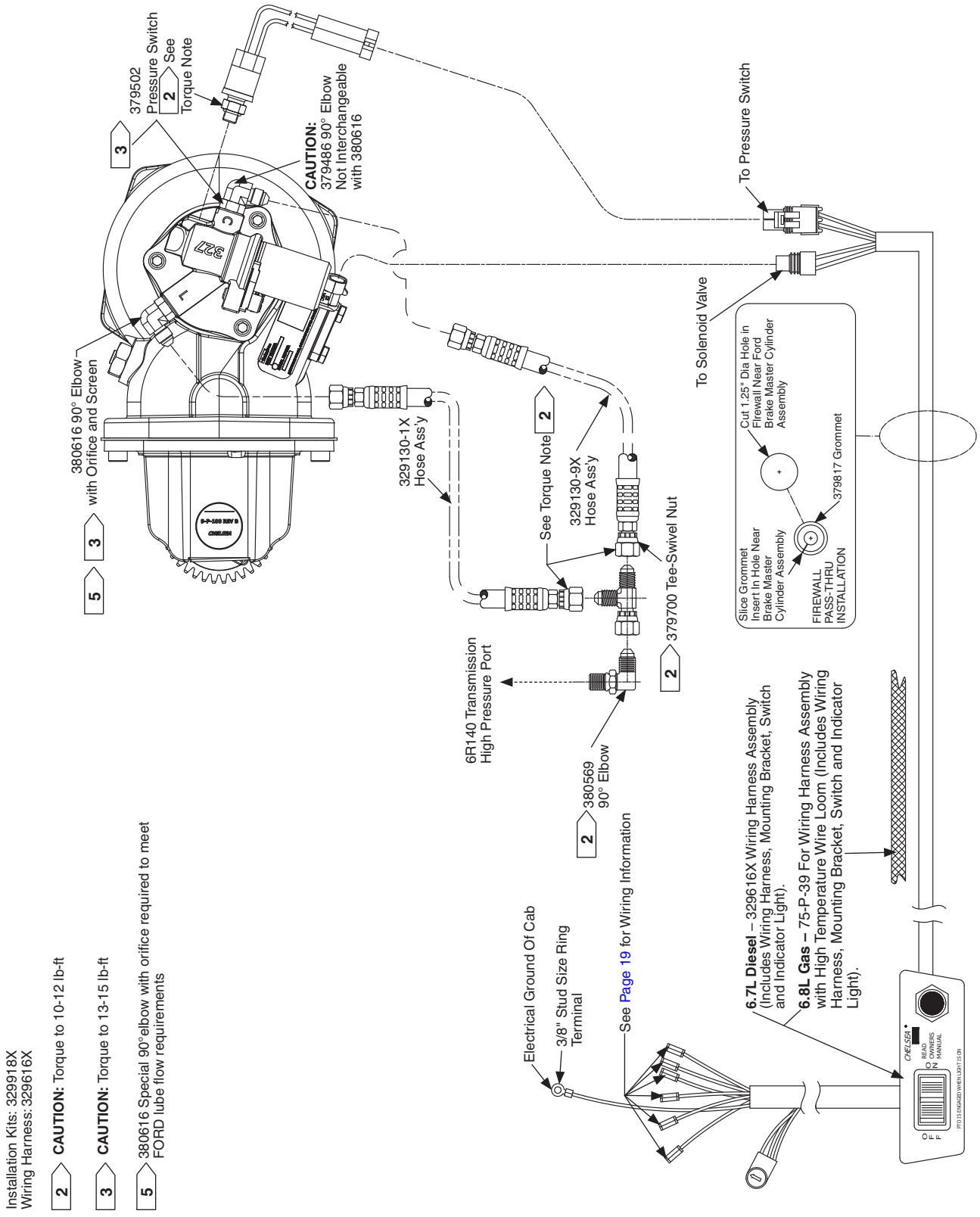

Installation Kits: 329918X
Wiring Harness: 329616X

2 **CAUTION:** Torque to 10-12 lb-ft

3 **CAUTION:** Torque to 13-15 lb-ft

5 380616 Special 90°elbow with orifice required to meet FORD lube flow requirements

NOTE: Strip wire ends 0.25" Prior to installing connector

Parker Chelsea
Parker Hannifin Corporation
Chelsea Products Division
Olive Branch, MS 38654 USA

Wiring Installation Chart (Shift Option B) (SK-611)
Medium Duty F650/750 – MY2016-MY2018 – 6.7L Diesel
272F w/o Electronic Overspeed Control (EOC)

Medium Duty F650/750 – DIESEL							
Chelsea PTO Wire Color		Blunt cut wires found on Driver Side behind Data Link					
		Stationary Mode			Mobile Mode		
		Function	Ford Wire Color	Circuit	Function	Ford Wire Color	Circuit
329616X Wiring Harness	Purple	12V Power	Yellow/Gray	#CBB35	12V Power	Yellow/Gray	#CBB35
	Yellow	PTO REQ1	Yellow/Green	#CE912	PTO REQ1	NOT USED	
	Yellow	PTO REQ2	NOT USED	#CE912	PTO REQ2	Blue/Orange (1)	#CE933
	White	PTO VREF	White/Brown	#LE434	PTO VREF	White/Brown	#LE434
	Green	PTO RPM	Green	#CE914	PTO RPM	Green	#CE914
	Gray	PTO RTN	Gray/Violet	#RE327	PTO RTN	Gray/Violet	#RE327
	Blue/White	PTO RELAY	Blue/White	#CE326	PTO RELAY	Blue/White	#CE326

Medium Duty F650 – MY2016-MY2018 – 6.8L Gas (SK-611)
272H w/o Electronic Overspeed Control (EOC)

Medium Duty F650/750 – GAS							
Chelsea PTO Wire Color		Blunt cut wires found Driver Side behind Data Link					
		Stationary Mode			Mobile (1)		
		Function	Ford Wire Color	Circuit	Function	Ford Wire Color	Circuit
75-P-39 Wiring Harness	Yellow/Gray	12V Power	Yellow/Gray Circuit	#CBB35	12V Power	Yellow/Gray Circuit	#CBB35
	Yellow/Blue	PTO REQ1	Yellow/Blue	#CE912	PTO REQ1	2016 - N/A	
						2017-2018 - Blue/Red	#CE933
	Blue	PTO REQ2	2016 - Blue/Orange or Red (2) 2017-2018 - NOT USED	#CE933	PTO REQ2	2016 - N/A (1)	
						2017-2018 - N/A	
	Yellow/Green	PTO VREF	Yellow/Green	#LE424	PTO VREF	Yellow/Green	#LE424
	Green	PTO RPM	Green	#CE914	PTO RPM	Green	#CE914
	Yellow/Violet	PTO RTN	Yellow/Violet	#RE407	PTO RTN	Yellow/Violet	#RE407
	Blue/White	PTO RELAY	Blue/White	#CE326	PTO RELAY	Blue/White	#CE326

NOTE:
(1) Mobile Mode is not available on the 2016 GAS Trucks.
(2) Blue/Orange prior to March 2016. Blue/Red after March 2016.
See Appendix for more year specific wiring information.

NOTE:
Some early build 2016 6.8L gas F650/750 vehicles have 2 identically colored wires for PTO, which are located in the blunt cut harness under the driver side dash. They are Yellow/Green stripes. Use a voltmeter to identify which circuit you need:

- One wire has 0V to ground (PCM PIN C1551B-84 Circuit #CE912)
- One has +5V to ground (PTO VREF, PCM PIN 01551B-52 Circuit #LE424)
- Circuit #CE912 will be changing to Yellow/Blue in later production.

NOTE:
Early build 2016 6.8L gas F650/750 vehicles (built before 10/22/15) have an incorrectly pinned customer access circuit. Circuit #CE326 is pinned in PCM connector C175B PIN 96. This circuit should be located at PIN 98. Vehicles built after 10/22/15 will have this circuit in the correct PCM connector cavity.

Reference Ford SVE Bulletin Q-241 for more information.

Mobile to Stationary Switch

1. If required for your application a Single Pole Double Throw (SPDT) switch can be installed in the cab to control PTO function between Mobile Mode and SEIC Stationary Mode. Connect the Chelsea YELLOW wire as illustrated below.

Switching Between Stationary and Mobile

To switch between Mobile & Stationary Mode – Install a Single Pole Double Throw (SPDT) switch as shown:

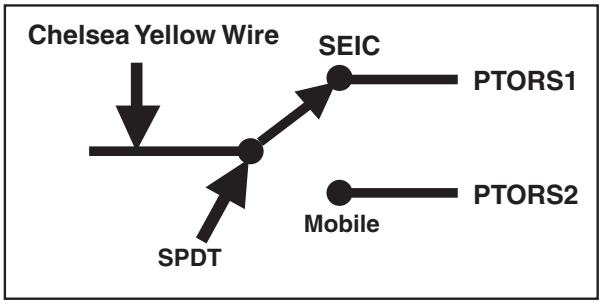

Parker Chelsea
Parker Hannifin Corporation
Chelsea Products Division
Olive Branch, MS 38654 USA

Wiring Chart (Shift Option K)
Medium Duty F650/750 – MY2016-MY2018 – 6.7L Diesel
Medium Duty F650/750 – MY2017-MY2018 – 6.8L Gas
272F & 272H w/ Electronic Overspeed Control (EOC)

(SK-612)

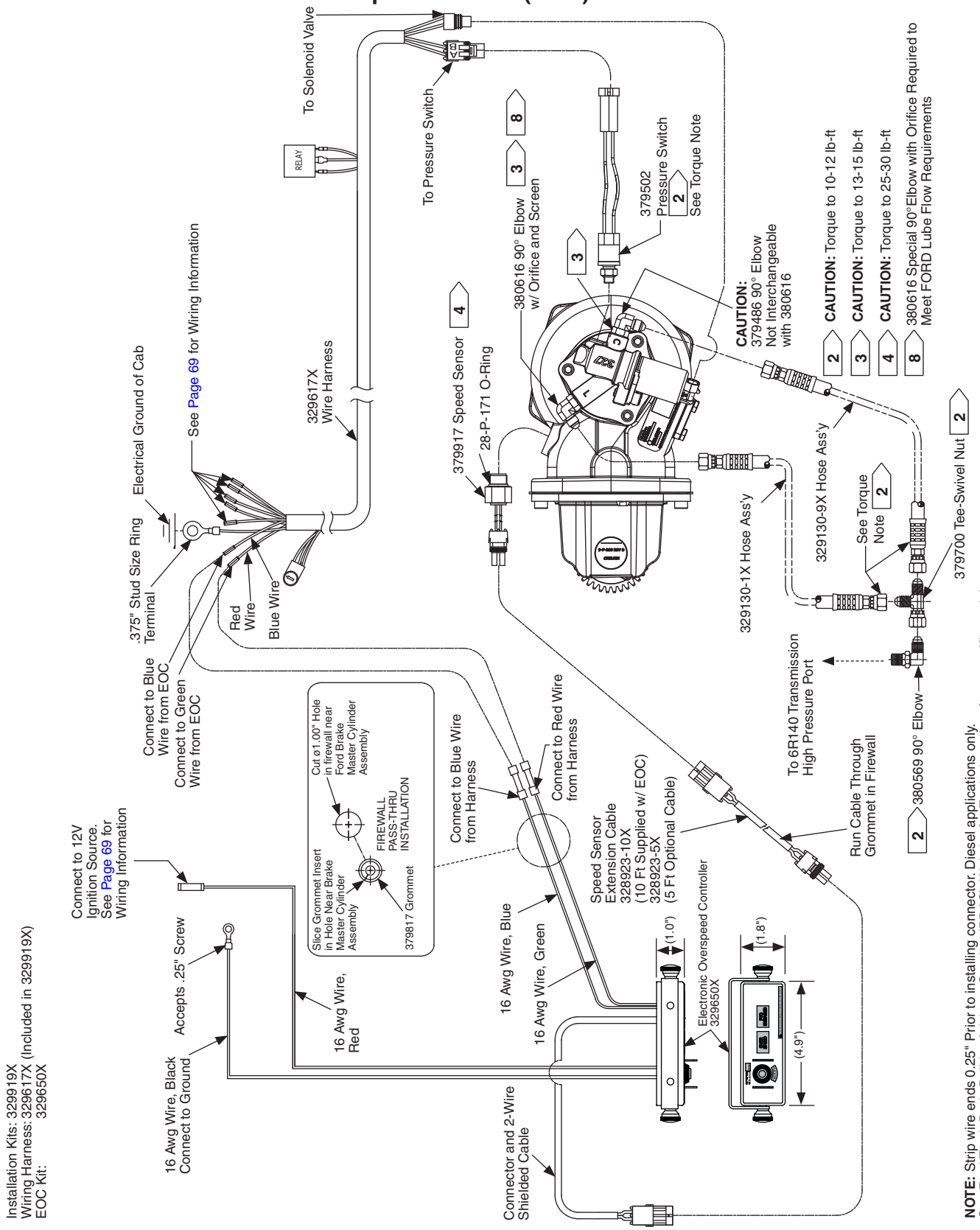

NOTE: Strip wire ends 0.25" Prior to installing connector. Diesel applications only.
See Ford Truck Body Builder Advisory Service (BBAS). Website for Ford wire colors for a specific model year.

Parker Chelsea
Parker Hannifin Corporation
Chelsea Products Division
Olive Branch, MS 38654 USA

Wiring Installation Chart (Shift Option K) (SK-612)
Medium Duty F650/750 – MY2016-MY2018 – 6.7L Diesel
272F w/ Electronic Overspeed Control (EOC)

Chelsea PTO Wire Harness		Stationary Mode			Mobile Mode		
		Function	Ford Wire Color	Circuit	Function	Ford Wire Color	Circuit
329617X Wiring Harness	White	PTO REF	White/Brown	#LE434	PTO REF	White/Brown	#LE434
	Gray	PTO RTN	Gray/Violet	#RE327	PTO RTN	Gray/Violet	#RE327
	Green	PTO RPM	Green	#CE914	PTO RPM	Green	#CE914
	Blue/White	PTO RLY	Blue/White	#CE326	PTO RLY	Blue/White	#CE326
	Black w/Ring Terminal	Chassis Ground			Chassis Ground		
	Yellow	PTO REQ1	Yellow/Green	#CE912	PTO REQ2	Blue/Orange (Before March 2016) (1) Blue/Red (After March 2016) (1)	#CE933
	Blue	Chelsea EOC Blue Wire			Chelsea EOC Blue Wire		
	Red	Chelsea EOC Green Wire			Chelsea EOC Green Wire		

NOTE: (1) Early MY2011 Product Units may come with two Blunt Cut Blue/Gray Stripe wires. One wire will be for PTO Function (PTORS2) the other will be a Customer Wire for "Park Only Output" (TRO-P).
NOTE: EOC not available for MY2016 & Prior.
Refer to Ford Body Builders web site for more on this subject.

Wiring Installation Chart (Shift Option K) (SK-612)
Medium Duty F650/750 – MY2017-MY2018 – 6.8L Gas
272H w/ Electronic Overspeed Control (EOC)

Chelsea PTO Wire Harness		Stationary Mode			Mobile Mode		
		Function	Ford Wire Color	Circuit	Function	Ford Wire Color	Circuit
329617X Wiring Harness	White	PTO REF	Yellow/Green	#LE424	PTO REF	Yellow/Green	#LE424
	Gray	PTO RTN	Yellow/Violet	#RE407	PTO RTN	Yellow/Violet	#RE407
	Green	PTO RPM	Green	#CE914	PTO RPM	Green	#CE914
	Blue/White	PTO RLY	Blue/White	#CE326	PTO RLY	Blue/White	#CE326
	Black w/Ring Terminal	Chassis Ground			Chassis Ground		
	Yellow	PTO REQ1	Yellow/Green F250-550 Yellow/Blue F650/750	#CE912	PTO REQ2	Blue/Orange (1)	#CE933
	Blue	Chelsea EOC Blue Wire			Chelsea EOC Blue Wire		
	Red	Chelsea EOC Green Wire			Chelsea EOC Green Wire		

NOTE: (1) Early MY2011 Product Units may come with two Blunt Cut Blue w/Gray Stripe wires. One wire will be for PTO Function (PTORS2) the other will be a Customer Wire for "Park Only Output" (TRO-P).
NOTE: EOC not available for MY2016 & Prior.
Refer to Ford Body Builders web site for more on this subject.

12V Power	Stationary Mode or Mobile Mode
Chelsea EOC Wire	**F650/750**
Red Wire	2016-2018 #CBB35 Yellow/Gray
Black w/Ring Terminal	Chassis Ground

Parker Chelsea
Parker Hannifin Corporation
Chelsea Products Division
Olive Branch, MS 38654 USA

Wiring Chart (Shift Option B)
Medium Duty F650 – MY2012-MY2015 – 6.8L Gas
272J w/o Electronic Overspeed Control (EOC)

(SK-613)

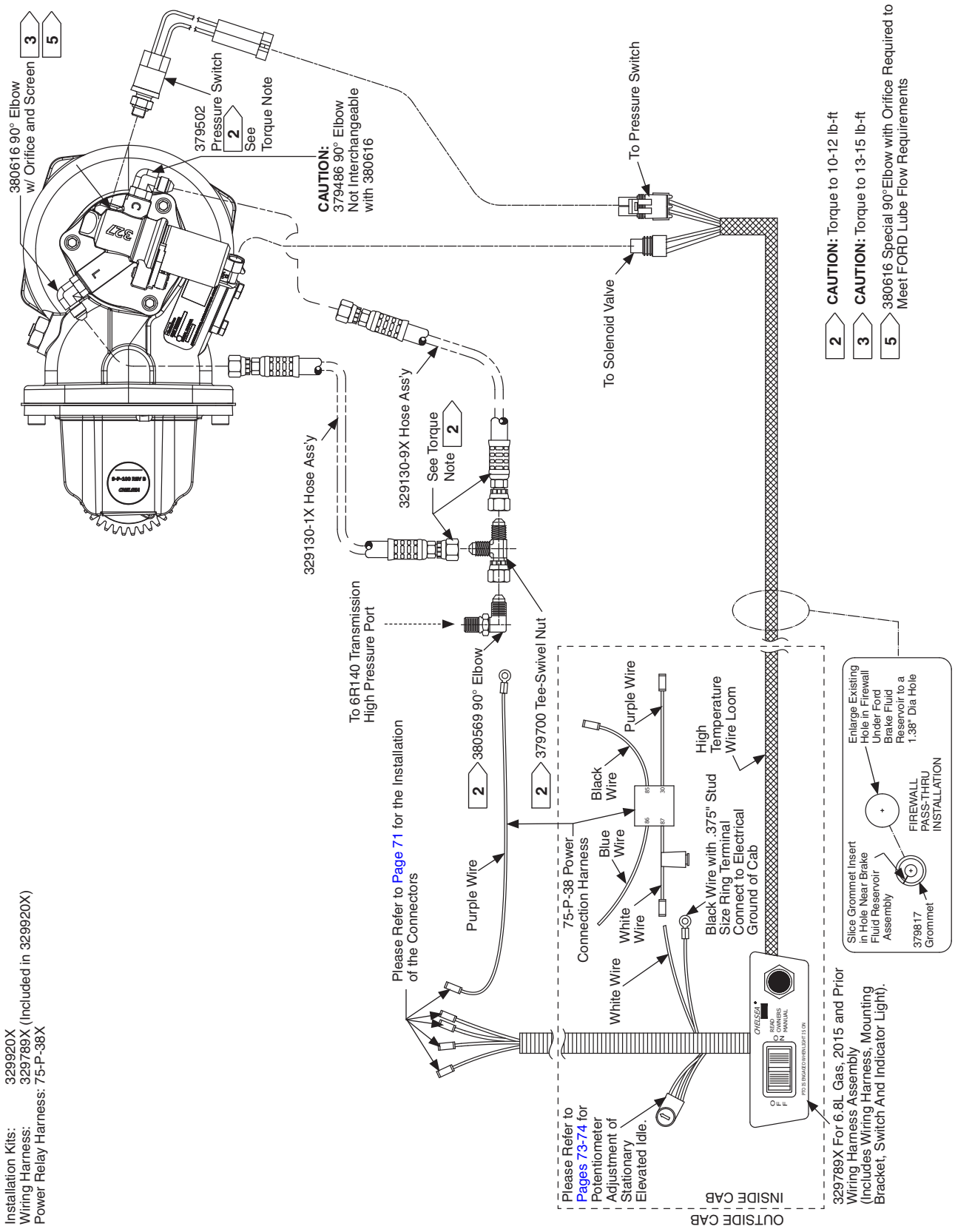

Installation Kits: 329920X
Wiring Harness: 329789X (Included in 329920X)
Power Relay Harness: 75-P-38X

NOTE: Strip wire ends 0.25" Prior to installing connector.
NOTE: The maximum torque available at the transmission is 250 lb-ft for model years 2015 and prior.

Parker Chelsea

Parker Hannifin Corporation
Chelsea Products Division
Olive Branch, MS 38654 USA

Wiring Chart (Shift Option B) (SK-613)
Medium Duty F650 – MY2012-MY2015 – 6.8L Gas
272J w/o Electronic Overspeed Control (EOC)

Wiring Interface Configurations

Chelsea PTO Wire Harness		Stationary Mode (Mobile Mode Not Available)		
		Function	Ford Wire Color	Circuit
75-P-38 Power Connection Harness	**Under Hood**			
	Purple w/ Butt Connector (80")		Violet/Yellow	#870
	Purple w/ Ring Terminal (80")		Battery Junction Box Battery Connection Post	
	Under Dash			
	Black		Ford Ground Circuit Black	#57
	Blue		12V Blue/Green	
	Purple		Violet/Yellow	#870
	White		Chelsea White Wire on 329789X Main Harness	
329789X Main Harness	**Under Hood**			
	Green	PTO RPM	Ford Circuit (Green)	#CE914
	Blue/White	PTO RLY	Ford Circuit (Blue/White)	#CE326
	Blue	PTO REQ2	Blue/Orange or Blue/Red (eff. March 2016)	#CE933
	Yellow	PTO REQ1	Yellow/Green	#CE912
	Under Dash			
	Black w/ Ring Terminal		Chassis Ground	

See Appendix for more year specific wiring information.

Parker Chelsea
Parker Hannifin Corporation
Chelsea Products Division
Olive Branch, MS 38654 USA

Due to the normal and sometimes severe torsional vibrations that Power Take-Off units experience, operators should follow a set maintenance schedule for inspections. Failure to service loose bolts or Power Take-Off leaks could result in potential auxiliary Power Take-Off or transmission damage.

Periodic PTO MAINTENANCE is required by the owner/operator to ensure proper, safe and trouble free operation.

Daily: Check all air, hydraulic and working mechanisms before operating PTO. Perform maintenance as required.

Monthly: Inspect for possible leaks and tighten all air, hydraulic and mounting hardware, if necessary. Torque all bolts, nuts, etc. to Chelsea specifications. Ensure that splines are properly lubricated, if applicable. Perform maintenance as required.

With regards to the direct mounted pump splines, the PTO requires the application of a specially formulated anti-fretting, high pressure, high temperature grease. The addition of the grease has been proven to reduce the effects of the torsional vibrations, which result in fretting corrosion on the PTO internal splines as well as the pump external splines. Fretting corrosion appears as a "rusting and wearing" of the pump shaft splines. Severe duty applications, which require long PTO running times and high torque may require more frequent regreasing. Applications such as Utility Trucks that run continuously and are lightly loaded also require frequent regreasing due to the sheer hours of running time. It is important to note that service intervals will vary for each and every application and are the responsibility of the end user of the product. Chelsea also recommends that you consult your pump owner's manuals and technical services for their maintenance guidelines. Fretting corrosion is caused by many factors and without proper maintenance the anti-fretting grease can only reduce its effects on components.

Chelsea offers the grease to our customers in two packages. The first is a 5/8 fluid ounce tube (379688), which is included with every applicable PTO, and the second is a 14-ounce grease cartridge (379831).

Warranty: Failure to comply entirely with the provisions set forth in the appropriate Owner's Manual will result in voiding of ALL Warranty consideration.

Potentiometer Settings

Potentiometer Settings - See Chart Number in corresponding box										
CHASSIS	**FUEL**	**MY2009**	**MY2010**	**MY2011**	**MY2012**	**MY2013**	**MY2014**	**MY2015**	**MY2016**	**MY2017-MY2018**
Super Duty F250-550	Gas	Chart I	Chart I	Chart I	Chart I	Chart I	Chart I	Chart I	Chart III	Chart IV
	Diesel	Chart I	Chart I	Chart II	Chart II	Chart II	Chart II	Chart II	Chart III	Chart IV
Medium Duty F650/750	Gas				Chart I	Chart I	Chart I	Chart I	Chart III	Chart IV
	Diesel								Chart III	Chart IV

Chart I

Super Duty F250-550 – 6.8L Gas MY2009-MY2015		**247 Series PTO**
Medium Duty F650/750 – 6.8L Gas MY2012-MY2015		**249G Series PTO**
Engine Target Speed (RPM)	**Resistor (Ohms)**	**Voltage (Volts)**
650 (Base)		
900	Open Circuit*	
912	3.9K	
1024	2.7K	3.61
1056	2.2K	4.18
1184	1.8K	4.8
1264	1.5K	5.39
1440	1.0K	6.76
1536	820	7.43
1648	680	8.06
1712	560	8.7
1792	470	9.25
1904	380	9.89
1936	330	10.27
2000	279	10.75
2064	220	11.2
2128	180	11.6
2160	150	11.9
2208	120	12.23
2256	100	12.46
2320	0 (Closed Circuit)	13.77
* TorqShift automatic transmission only; manual transmission requires a resistor.		

Super Duty F250-550 – 6.8L Diesel MY2009-MY2010		**247 Series PTO**
Engine Target Speed (RPM)	**Resistor (Ohms)**	**Voltage (Volts)**
680 (Base)		
1200	Open Circuit*	
1200	43K	
1260	27K	0.688
1320	22K	0.888
1380	16K	1.088
1440	13K	1.288
1500	11K	1.488
1560	9K	1.688
1620	7.5K	1.888
1680	6.2K	2.088
1740	5.6K	2.288
1800	4.7K	2.488
1860	3.9K	2.688
1920	3.3K	2.888
1980	2.7K	3.088
2040	2.4K	3.288
2100	2.0K	3.488
2160	1.6K	3.688
2220	1.3K	3.888
2280	1.0K	4.088
2340	750	4.288
2400	510	4.488

Chart II

Super Duty F250-550 – 6.7L Diesel MY2011-MY2015		**249F Series PTO**
Engine Target Speed (RPM)	**Resistor (Ohms)**	*** Voltage (Volts)**
680 (Base)		
900	51K	0.4
1000	36K	0.59
1200	20K	0.971
1400	12K	1.352
1600	9100	1.733
1800	6200	2.114
2000	4700	2.495
2200	3300	2.876
2400	2400	3.257
2600	1800	3.638
2800	1100	4.019
3000	680	4.4
* Voltage Reading - Chelsea Wiring Harness "PTO_RPM" Green Wire		

Potentiometer Settings (Continued)

Chart III

Super Duty F250-550 – 6.8L Gas MY2016		247 Series
Medium Duty F650/750 – 6.8L Gas MY2016		**249H Series**
Engine Target Speed (RPM)	**Resistor (Ohms)**	**Voltage (Volts)**
650 (Base)		
912	3.9K	
1024	2.7K	3.61
1056	2.2K	4.18
1184	1.8K	4.8
1264	1.5K	5.39
1440	1.0K	6.76
1536	820	7.43
1648	680	8.06
1712	560	8.7
1792	470	9.25
1904	380	9.89
1936	330	10.27
2000	279	10.75
2064	220	11.2
2128	180	11.6
2160	150	11.9
2208	120	12.23
2256	100	12.46
2320	0 (Closed Circuit)	13.77

Super Duty F250-550 – 6.7L Diesel MY2016			249F Series PTO
Medium Duty F650/750 – 6.7L Diesel MY2016			**249F Series PTO**
Engine Target Speed (RPM)	**Resistor (Ohms)**	**Voltage (Volts)**	
680 (Base)			
900	51K	0.4	
1000	36K	0.59	
1200	20K	0.971	
1400	12K	1.352	
1600	9100	1.733	
1800	6200	2.114	
2000	4700	2.495	
2200	3300	2.876	
2400	2400	3.257	
2600	1800	3.638	
2800	1100	4.019	
3000	680	4.4	

Diesel Split Shaft Mode		
Engine Target Speed (RPM)	**Resistor (Ohms)**	**Voltage (Volts)**
680 (Base)		
700	51K	0.4
800	36K	0.574
1000	20K	0.922
1200	13K	1.27
1400	10K	1.617
1600	7500	1.965
1800	5600	2.313
2000	4300	2.661
2200	3000	3.009
2400	2200	3.357
2600	1600	3.704
2800	1100	4.052
3000	680	4.4

Mobile Mode		
Engine Target Speed (RPM)	**Resistor (Ohms)**	**Voltage (volts)**
Commanded by throttle	360	4.644

Chart IV

Super Duty F250-550 – 6.2L/6.8L Gas MY2017-MY2018			249H
Medium Duty F650/750 – 6.2L/6.8L Gas MY2017-MY2018			**249H**
Stationary Mode			
Engine Target Speed (RPM)	**Resistor (Ohms)**	**Voltage (Volts)**	
800	54050	0.4	
900	31454	0.65	
1000	21411	0.9	
1100	15735	1.15	
1200	12086	1.4	
1300	9542	1.65	
1400	7668	1.9	
1500	6230	2.15	
1600	5092	2.4	

Engine Target Speed (RPM)	Resistor (Ohms)	Voltage (Volts)
1700	4168	2.65
1800	3403	2.9
1900	2760	3.15
2000	2212	3.4
2100	1738	3.65
2200	1326	3.9
2300	963	4.15
2400	641	4.4

Mobile Mode		
Engine Target Speed (RPM)	**Resistor (Ohms)**	**Voltage (Volts)**
Minimum 750 (Commanded by throttle)	360	4.644

Super Duty F250-550 – 6.7L Diesel MY2015-MY2018			249F
Medium Duty F650/750 – 6.7L Diesel MY2017-MY2018			**249F**
Stationary Mode			
Engine Target Speed (RPM)	**Resistor (Ohms)**	**Voltage (volts)**	
900	54050	0.4	
1000	35098	0.59	
1200	19491	0.971	
1400	12677	1.352	
1600	8858	1.733	
1800	6415	2.114	
2000	4718	2.495	
2200	3471	2.876	
2400	2515	3.257	
2600	1759	3.638	
2800	1147	4.019	
3000	641	4.4	

Split Shaft Mode		
Engine Target Speed (RPM)	**Resistor (Ohms)**	**Voltage (Volts)**
700	54050	0.4
800	36247	0.574
1000	20795	0.922
1200	13810	1.27
1400	9830	1.617
1600	7258	1.965
1800	5460	2.313
2000	4132	2.661
2200	3111	3.009
2400	2301	3.357
2600	1644	3.704
2800	1099	4.052
3000	641	4.4

Mobile Mode		
Engine Target Speed (RPM)	**Resistor (Ohms)**	**Voltage (Volts)**
Minimum 750 (Commanded by throttle)	360	4.644

NOTE: Voltages are exact to achieve RPM shown.
Resistors are standard 5% values (1 watt) and yield RPM values +/- 32 rpm.

Installing the PTO Heat Shield – GAS Engines ONLY (After April 2017)

Heat Shield A

1. Locate and unplug the O_2 sensor.
2. Install heat shield (A) with the hole over the O_2 sensor.
3. Wrap heat shield around the exhaust pipe overlapping the seam. Seam should be facing the ground.
4. Make sure heat shield is snug against the bend at the forward end of the heat shield.
5. Install (8) clamps as shown in (**Fig. 72**).

Heat Shield B

1. Install piece (B) on the downward bend of the exhaust pipe adjacent to heat shield (A).
2. Lap ears of heat shield (B) over the ears of heat shield (A).
3. Seam of heat shield (B) should be facing forward of the truck.
4. Install (4) clamps as shown in (**Fig. 72**).

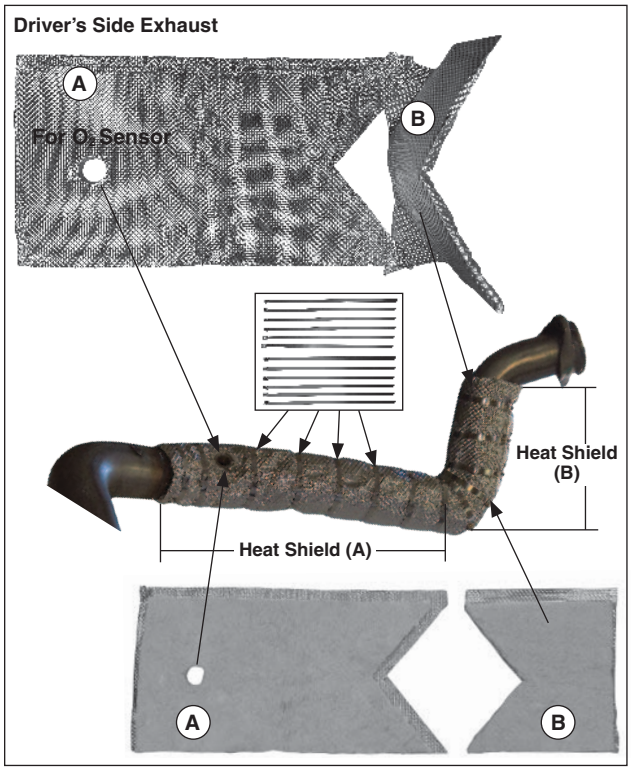

Figure 72

Installing the PTO Heat Shield – GAS Engines ONLY (Prior to April 2017)

1. Locate the Ford O_2 sensor located on the inside of the vertical exhaust pipe, located on the PTO side (approximately 3-4 inches above the top of the PTO) (**Fig. 73**).
2. Wrap the top of the heat shield material around the pipe just below the O_2 sensor, with the open end of the heat shield opposite the PTO (**Fig. 74**).
3. Secure (1) stainless steel clamp around the top of the heat shield, leaving approximately 1.0" of heat shield material exposed at the top of the clamp (**Fig. 74**).
4. Secure the second clamp at the 90 degree bend of the pipe. Insure that the heat shield material is tight with the seam (split) remaining on the back side of the pipe opposite the PTO.
5. Install the third clamp equal distance between the 1st clamp and the 2nd clamp (elbow clamp).
6. Secure the fourth clamp approximately 8.0" to the right of the 90° elbow.
7. Attach the fifth clamp approximately 8.0" from clamp #4.

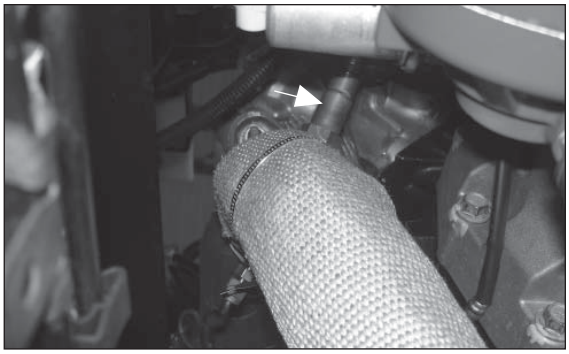
Figure 73

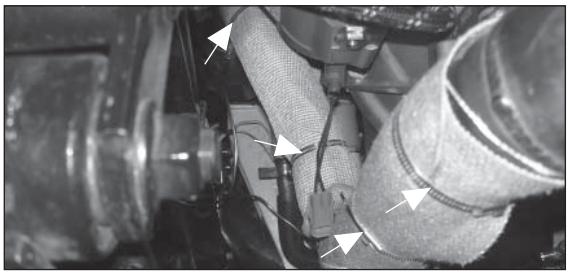
Figure 74

NOTE: The heat shield should end right at the pipe weld. There should be at least 1.0" of heat shield material exposed between the clamp and the pipe weld.

Parker Chelsea

Parker Hannifin Corporation
Chelsea Products Division
Olive Branch, MS 38654 USA

TorqShift® Bracket – Field Modification MY2005

- Cut this area to eliminate interference with the PTO housing.
- Grind surface to eliminate sharp edges.
- Clean and paint the part with rust preventative.

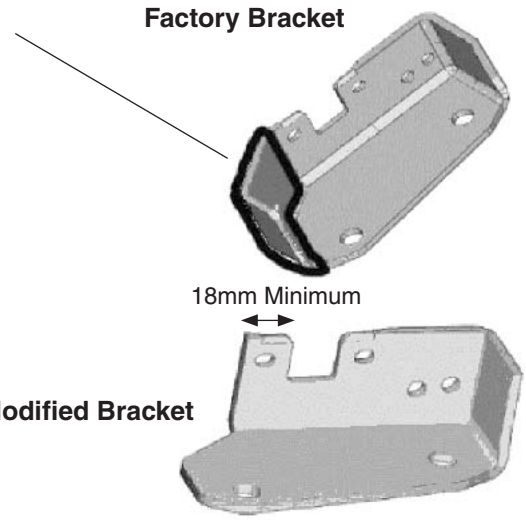

Models Affected: 2005 Model Year F250-550 with TorqShift® 5-Speed Automatic Transmission with PTO Provision Option.

Background: The shift bracket holding the shift linkage in position was revised for MY2005. That change resulted in the bracket interfering with the Chelsea and Muncie PTOs by approximately 2.8 mm, preventing installation of the aftermarket PTOs.

Recommendation: Grind or cut away a portion of the bracket to gain clearance. The illustration in the attachment to this bulletin depicts how much material may be removed without deteriorating the strength and reliability of the bracket and transmission gearshift function. Affected vehicles built approximately November 15th, 2004, will incorporate a revised shift bracket that provides clearance to the aftermarket PTO.

WARNING: The modification shown is the only one supported. No modifications to the bracket mounting holes are acceptable.

For additional questions please contact the Ford Truck Body Builders Advisory Service at toll-free number 1-877-840-4338, or by e-mail at bbasqa@ford.com. QVM Bulletins can be found at www.fleet.ford.com/truckbbas.

Ref: Ford SVE Bulletin Q-112 dated October 15, 2004

Ford Shifter & Bracket Removal and Installation MY2016 & Prior

Removal

1. Next the vehicle selector lever cable and bracket must be removed to help in the installation (**Fig. 82**).

2. The following instructions are Ford's recommended instructions for removal of the lever cable and bracket for PTO installation on the TorqShift® 6 transmission.

Item	Ford Part Number	Description
4	56539	Selector lever cable bracket bolts (2 required)
5	7B229	Selector lever cable bracket
6	7H181	Retaining clip

NOTICE: To prevent selector lever cable damage, do not apply force to the selector lever cable assembly between the manual control lever and the selector lever cable bracket.

3. Position the vehicle selector lever into the drive position.

4. Disconnect the selector lever cable from the manual control lever (**Fig. 83**).

5. Remove and discard the selector lever cable retaining clip.

   - Lift the lock tabs on the retaining clip arms to release the clip.
   - Pull the clip and selector lever cable from the selector lever cable bracket (**Fig. 84**).

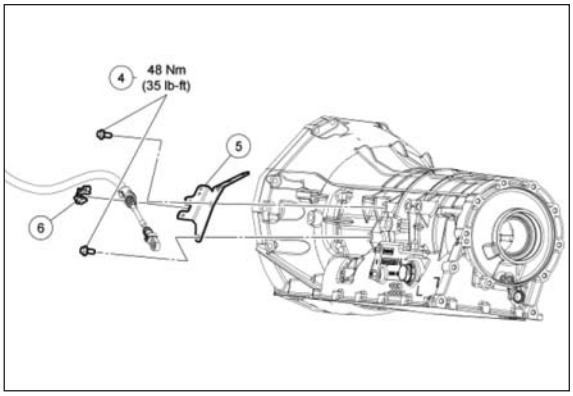

Figure 82

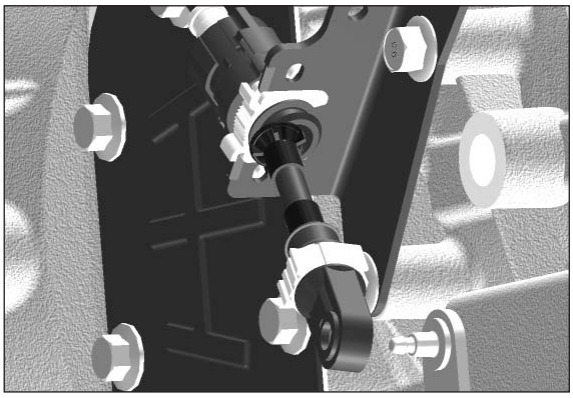
Figure 83

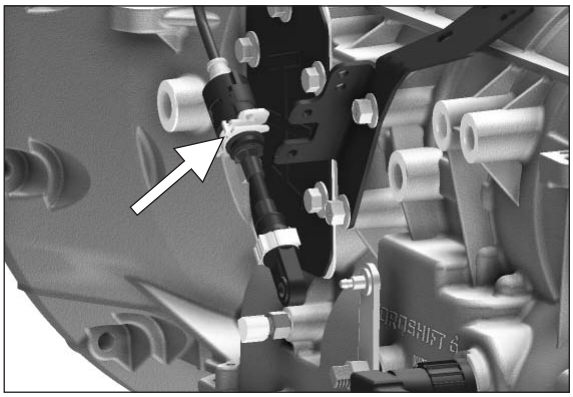
Figure 84

Ford Shifter & Bracket Removal and Installation MY2016 & Prior (Continued)

Installation

6. Move the manual control lever all the way forward into the LOW position, then move it 3 detents rearward (**Fig. 85**).

NOTE: When installing the selector lever cable, make sure that the selector lever cable locking tabs are locked in place. Press the selector lever cable into the bracket and listen for the cable to click in place. Pull back on the selector lever cable to make sure that it is locked into the bracket.

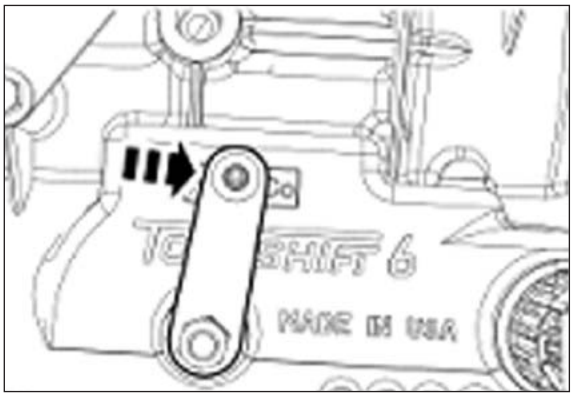

Figure 85

Install the selector lever cable into the selector lever cable bracket and install a new retaining clip.

7. Correct the selector lever cable onto manual control lever (**Fig. 86**).

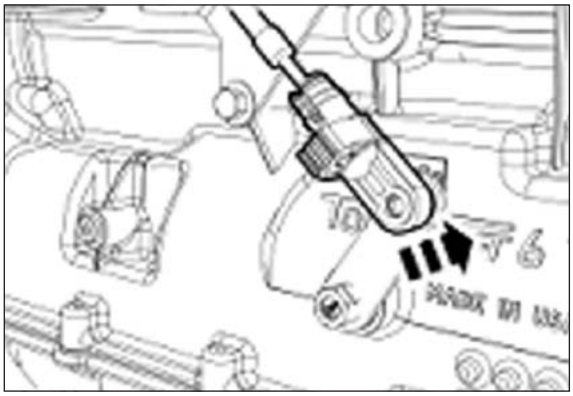
Figure 86

8. Slide the adjuster tab in place to lock the selector lever cable (**Fig. 87**).

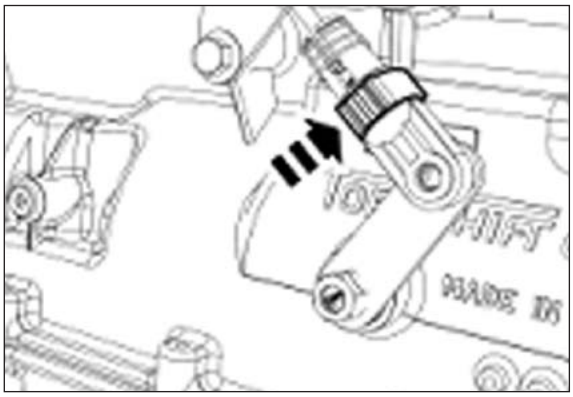
Figure 87

Ford Shifter & Bracket Removal and Installation MY2017-MY2018

1. Clean the cable adjuster lock (**Fig. 88**).

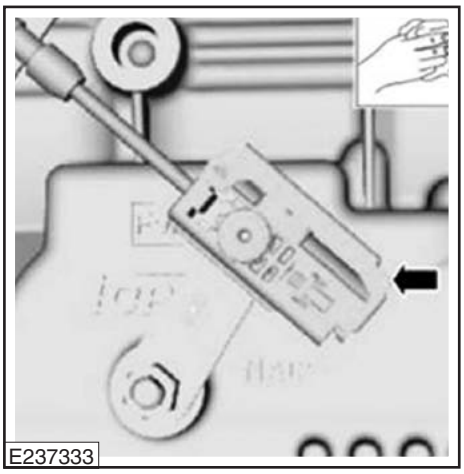

Figure 88

2. Open the adjuster lock (**Fig. 89**).

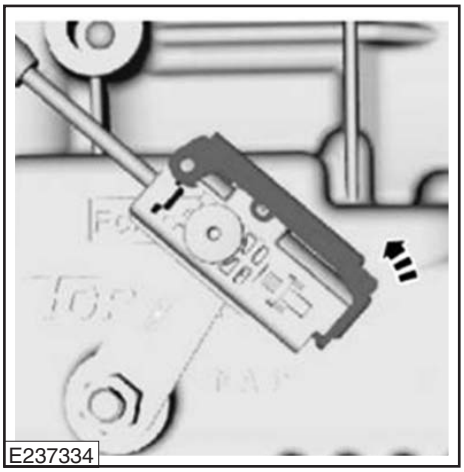

Figure 89

3. Disconnect the selector lever from the transmission manual lever (**Fig. 90**).

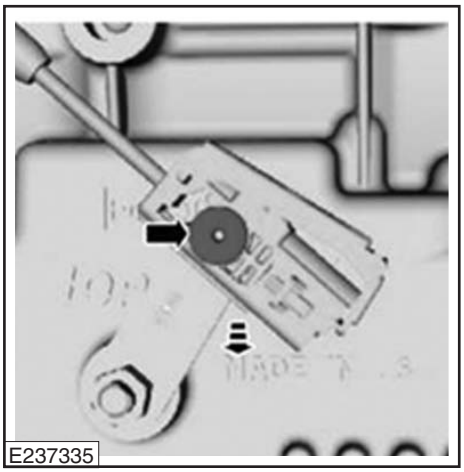

Figure 90

4. Remove the selector lever retainer bolt (**Fig. 91**).

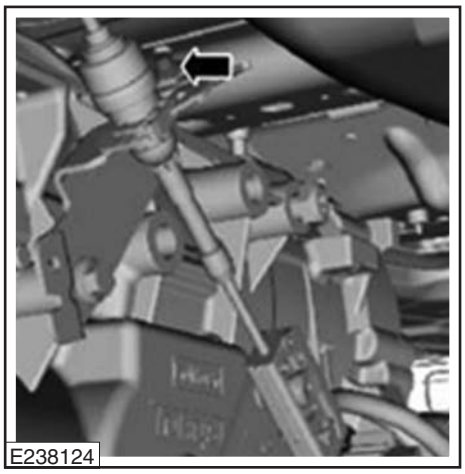

Figure 91

5. Remove the clip and the selector lever cable (**Fig. 92**).

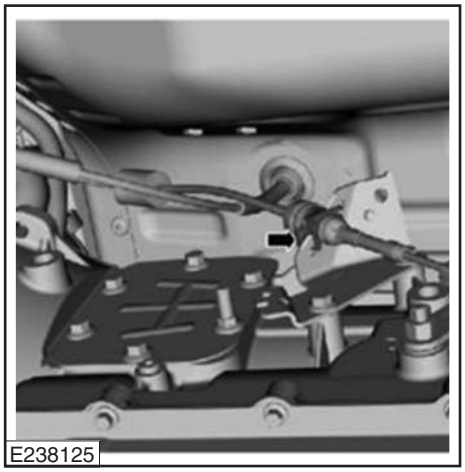

Figure 92

Installation

1. If necessary, open the adjustor lock (**Fig. 93**).

Figure 93

NOTICE: To prevent selector lever cable damage, do not apply force to the selector lever cable between the manual control lever and the selector lever cable bracket.

Ford Shifter & Bracket Removal and Installation MY2017-MY2018 (Continued)

2. Install the selector lever cable and the clip (**Fig. 94**).

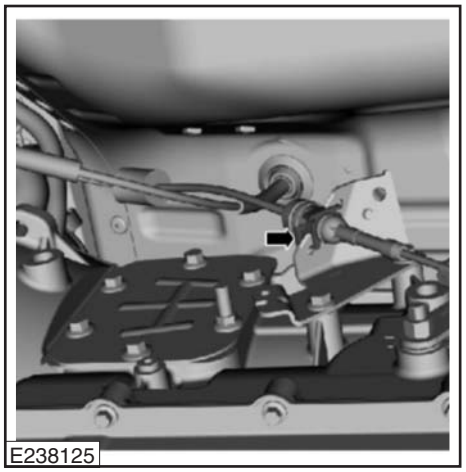

Figure 94

3. Install the selector lever retainer bolt. Torque to 62 lb.in [7 Nm] (**Fig. 95**).

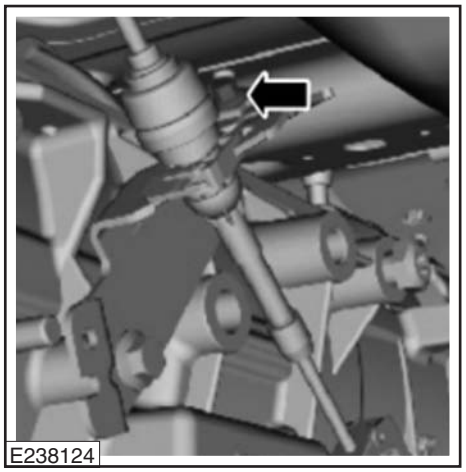

Figure 95

4. Verify the selector lever is in **D** (**Fig. 96**).

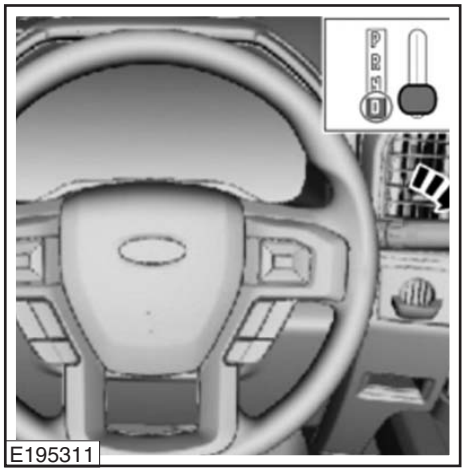

Figure 96

5. Position the manual lever in **D**.
   a. Rotate the manual lever clockwise until it stops.
   b. Rotate the manual lever counterclockwise 3 detents (**Fig. 97**).

Figure 97

6. Connect the selector lever cable to the transmission manual lever (**Fig. 98**).

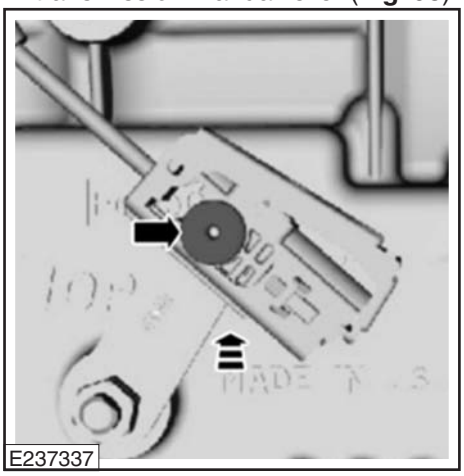

Figure 98

7. Close the adjuster lock (**Fig. 99**).

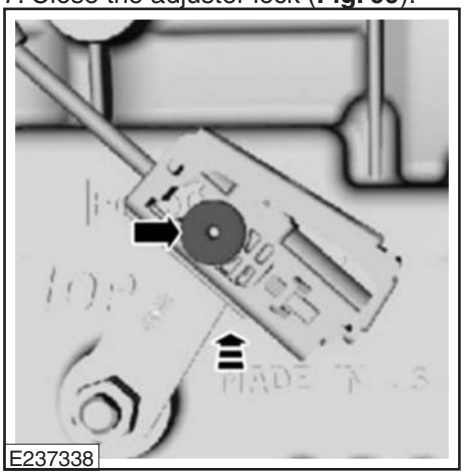

Figure 99

8. Verify the vehicle starts in **P** and **N** only and that the reverse lamps illuminate in **R**.

Chelsea PTO Ford Application Chart – PTO w/o EOC

		Model Year				
		2009-2010	**2011-2012**	**2013-2015**	**2016**	**2017-2018**
Super Duty F250-550	**Gas**	**247**	**247**	**247**	**247**	**249H**
	Transmission	5R110	5R110	5R110	5R110	6R140
	*Wiring Harness	329598X	329598X	329598X	329598X	75-P-39
	Installation Kit	329600X	329600X	329600X	329600X	329902X
	Heat Shield Kit					329790X
	Diesel	**247**	**249F**	**249F**	**249F**	**249F**
	Transmission	5R110	6R140	6R140	6R140	6R140
	*Wiring Harness	329598X	329616X	329616X	329616X	329616X
	Installation Kit	329600X	329651X	329651X	329651X	329651X
			2012 Only			
Medium Duty F650/750	**Gas**		**249G**	**249G**	**249H**	**249H**
	Transmission		6R140	6R140	6R140	6R140
	*Wiring Harness		329789X	329789X	75-P-39	75-P-39
	Installation Kit		329804X	329804X	329902X	329902X
	Heat Shield Kit		329790X	329790X	329790X	329790X
	Misc Kit		75-P-38X	75-P-38X		
	Diesel	**Allison Transmissions**			**249F**	**249F**
	Transmission				6R140	6R140
	*Wiring Harness				329616X	329616X
	Installation Kit				329651X	329651X

* Wiring Harness is included in the installation kit unless otherwise noted.

Parker Chelsea

Parker Hannifin Corporation
Chelsea Products Division
Olive Branch, MS 38654 USA

Chelsea – Ford Wiring Chart Diesel

6.7L Diesel Harness P/N 329616X		Chassis Group	Ford Wire Color, Diesel 6.7L (Reference Ford Bulletin Q-180 and Q-236, and Q256)			
Ford Function	**Chelsea Wire Color**		**2011**	**2012-2015**	**2016**	**2017-2018**
12V SOURCE	Purple	SUPER DUTY F250-550	Yellow/Orange (Early) White/Blue (#CDC64)	White/Blue (#CDC64)	White/Blue (#CDC64)	Ford Green/Orange F250-550 Yellow/Grey F650/750 (Pin 2) Chelsea - Purple
		MEDIUM DUTY F650/750			Yellow/Gray (#CBB35)	
PTO REQUEST 1	Yellow	SUPER DUTY F250-550	Yellow/Green	Yellow/Green	Yellow/Green	Stationary Mode: Ford - Yellow/Green (Pin 7) Chelsea - Yellow
		MEDIUM DUTY F650/750			Yellow/Green	
PTO REQUEST 2		SUPER DUTY F250-550	Blue/Orange	Blue/Orange	Blue/Orange	Mobile Mode (Live Drive): Ford Blue/Orange F250-550 Blue/Red F650/750 (Pin 11) Chelsea - Yellow
	Yellow	MEDIUM DUTY F650/750			Blue/Orange (Blue/Red eff. March 2016)	
PTO RELAY	Blue/White	SUPER DUTY F250-550	Blue/White	Blue/White	Blue/White	Ford - Blue/White (Pin 4) Chelsea - Blue/White
		MEDIUM DUTY F650/750			Blue/White	
PTO VREF	White	SUPER DUTY F250-550	White/Brown	White/Brown	White/Brown	Ford - White/Brown (Pin 10) Chelsea - White/Brown
		MEDIUM DUTY F650/750			White/Brown	
PTO RPM	Green	SUPER DUTY F250-550	Green	Green	Green	Ford - Green (Pin 9) Chelsea - Green
		MEDIUM DUTY F650/750			Green	
PTO SIGRTN	Gray	SUPER DUTY F250-550	Gray/Violet	Gray/Violet	Gray/Violet	Ford - Gray/Violet (Pin 6) Chelsea - Gray/Violet
		MEDIUM DUTY F650/750			Gray/Violet	
GROUND	Black w/Ring Term.	SUPER DUTY MEDIUM DUTY	Chassis Ground			

Parker Hannifin Corporation
Chelsea Products Division
Olive Branch, MS 38654 USA

Chelsea – Ford Wiring Chart Gas

6.8L Gas		Chassis Group	Ford Wire Color, 6.8L Gas (Reference Ford Bulletin Q-180, Q-236 and Q-256)					
Ford Circuit	**Chelsea Wire Color**		**2011**	**2012**	**2013-2015**	**2016**		**2017-2018**
12V SOURCE	White/Blue (247)	SD	Yellow/ Orange Early - White/Blue	White/Blue	White/Blue	White/Blue		Ford - Green/Orange (PIN 2) Chelsea - Yellow/Gray
	White Wire to Relay Harness attached to Battery Source	MD - MY12-15		Blue Ign Wire Purple Pass-Thru Black	Blue Ign Wire Purple Pass-Thru Black			
	Yellow/Gray	MD - MY16+				Yellow/Gray		Ford - Yellow/Gray Chelsea - Yellow/Gray
PTO REQUEST 1	Orange (247)	SD	Yellow/Green	Yellow/Green	Yellow/Green	Yellow/Green	Stationary Mode	Ford - Yellow/Green (PIN 7) Chelsea - Yellow/Blue
	Yellow	MD - MY13-15		White/Red Early - Yellow/Green	Yellow/Green			
	Yellow/Blue	MD - MY16+				Yellow/Blue Early - Yellow/Green		Ford - Yellow/Green Chelsea - Yellow/Blue
PTO REQUEST 2	Yellow (PTO_engage)	SD	Blue/Orange	Blue/Orange	Blue/Orange	Blue/Orange	Mobile Mode (Live Drive)	Ford - Blue/Orange (PIN 11) Chelsea - Yellow/Blue
	Blue	MD - MY13-15		Black/Orange Early - Blue/Orange	Blue/Orange			
	Blue Yellow/Blue	MD - MY16 MD - MY17				Blue/Orange (Blue/Red eff. March 2016)		Ford - Blue/Red (PIN 11) Chelsea - Yellow/Blue
PTO RELAY	Black With Butt Conn.	SD	Blue/White	Blue/White	Blue/White	Blue/White		Ford - Blue/White (PIN 4) Chelsea - Blue/White
	Blue/White	MD - MY13-15		White/Purple Early - Blue/White	Blue/White			
	Blue/White	MD - MY16+				Blue/White		Ford - Blue/White Chelsea - Blue/White
PTO VREF		SD						Ford - Yellow/Green (PIN 18) Chelsea - Yellow/Green
		MD - MY13-15						
	Yellow/Green	MD - MY16+				Yellow/Green		Ford - Yellow/Green Chelsea - Yellow/Green
PTO RPM	Red (247)	SD	Green	Green	Green	Green		Ford - Green Chelsea - Green
	Green	MD - MY13-15		Tan/Orange Early - Green	Green			
	Green	MD - MY16+				Green		Ford - Green Chelsea - Green
PTO SIGRTN		SD						Ford - Yellow/Violet Chelsea - Yellow/Violet
		MD - MY13-15						
	Yellow/Violet	MD - MY16+				Yellow/Violet		Ford - Yellow/Violet Chelsea - Yellow/Violet
GROUND	Black w/Ring Term.	SD	Ground	Ground	Ground	Ground		Ground
	Black w/Ring Term.	MD - MY13-15		Ground	Ground			
		MD - MY16+				Ground		Ground

SD = Super Duty (F250-550) / MD = Medium Duty (F650/750)

Parker Hannifin Corporation
Chelsea Products Division
Olive Branch, MS 38654 USA

Notes

Parker Hannifin Corporation
Chelsea Products Division
Olive Branch, MS 38654 USA

Notes

Parker Hannifin Corporation
Chelsea Products Division
Olive Branch, MS 38654 USA

Notes

Parker Chelsea

Parker Hannifin Corporation
Chelsea Products Division
Olive Branch, MS 38654 USA

Offer of Sale

The items described in this document and other documents and descriptions provided by Parker Hannifin Corporation, its subsidiaries and its authorized distributors ("Seller") are hereby offered for sale at prices to be established by Seller. This offer and its acceptance by any customer ("Buyer") shall be governed by all of the following Terms and Conditions. Buyer's order for any item described in its document, when communicated to Seller verbally, or in writing, shall constitute acceptance of this offer. All goods, services or work described will be referred to as "Products".

1. Terms and Conditions. Seller's willingness to offer Products, or accept an order for Products, to or from Buyer is subject to these Terms and Conditions or any newer version of the terms and conditions found on-line at www.parker.com/saleterms/. Seller objects to any contrary or additional terms or conditions of Buyer's order or any other document issued by Buyer.

2. Price Adjustments; Payments. Prices stated on Seller's quote or other documentation offered by Seller are valid for 30 days, and do not include any sales, use, or other taxes unless specifically stated. Unless otherwise specified by Seller, all prices are F.C.A. Seller's facility (INCOTERMS 2010). Payment is subject to credit approval and is due 30 days from the date of invoice or such other term as required by Seller's Credit Department, after which Buyer shall pay interest on any unpaid invoices at the rate of 1.5% per month or the maximum allowable rate under applicable law.

3. Delivery Dates; Title and Risk; Shipment. All delivery dates are approximate and Seller shall not be responsible for any damages resulting from any delay. Regardless of the manner of shipment, title to any products and risk of loss or damage shall pass to Buyer upon placement of the products with the shipment carrier at Seller's facility. Unless otherwise stated, Seller may exercise its judgment in choosing the carrier and means of delivery. No deferment of shipment at Buyers' request beyond the respective dates indicated will be made except on terms that will indemnify, defend and hold Seller harmless against all loss and additional expense. Buyer shall be responsible for any additional shipping charges incurred by Seller due to Buyer's acts or omissions.

4. Warranty. Seller warrants that all products sold, other than the 590 Series, conform to the applicable Parker Chelsea standard specification for the lesser period of 2 years (24 Months) from date of service or 2-1/2 years (30 Months) from date of build (as marked on the product name plate). Seller warrants that the 590 Series will conform to the applicable Seller standard specification for the lesser period of 2 years (24 Months) from date of service or 2000 hours of usage. The prices charged for Seller's products are based upon the exclusive limited warranty stated above, and upon the following disclaimer: **DISCLAIMER OF WARRANTY: THIS WARRANTY COMPRISES THE SOLE AND ENTIRE WARRANTY PERTAINING TO PRODUCTS PROVIDED HEREUNDER. SELLER DISCLAIMS ALL OTHER WARRANTIES, EXPRESS AND IMPLIED, INCLUDING DESIGN, MERCHANTABILITY AND FITNESS FOR A PARTICULAR PURPOSE.**

5. Claims; Commencement of Actions. Buyer shall promptly inspect all Products upon delivery. No claims for shortages will be allowed unless reported to the Seller within 10 days of delivery. No other claims against Seller will be allowed unless asserted in writing within 30 days after delivery. Buyer shall notify Seller of any alleged breach of warranty within 30 days after the date the defect is or should have been discovered by Buyer. Any action based upon breach of this agreement or upon any other claim arising out of this sale (other than an action by Seller for an amount due on any invoice) must be commenced within 12 months from the date of the breach without regard to the date breach is discovered.

6. LIMITATION OF LIABILITY. UPON NOTIFICATION, SELLER WILL, AT ITS OPTION, REPAIR OR REPLACE A DEFECTIVE PRODUCT, OR REFUND THE PURCHASE PRICE. IN NO EVENT SHALL SELLER BE LIABLE TO BUYER FOR ANY SPECIAL, INDIRECT, INCIDENTAL OR CONSEQUENTIAL DAMAGES ARISING OUT OF, OR AS THE RESULT OF, THE SALE, DELIVERY, NON-DELIVERY, SERVICING, USE OR LOSS OF USE OF THE PRODUCTS OR ANY PART THEREOF, OR FOR ANY CHARGES OR EXPENSES OF ANY NATURE INCURRED WITHOUT SELLER'S WRITTEN CONSENT, EVEN IF SELLER HAS BEEN NEGLIGENT, WHETHER IN CONTRACT, TORT OR OTHER LEGAL THEORY. IN NO EVENT SHALL SELLER'S LIABILITY UNDER ANY CLAIM MADE BY BUYER EXCEED THE PURCHASE PRICE OF THE PRODUCTS.

7. User Responsibility. The user, through its own analysis and testing, is solely responsible for making the final selection of the system and Product and assuring that all performance, endurance, maintenance, safety and warning requirements of the application are met. The user must analyze all aspects of the application and follow applicable industry standards and Product information. If Seller provides Product or system options, the user is responsible for determining that such data and specifications are suitable and sufficient for all applications and reasonably foreseeable uses of the Products or systems.

8. Loss to Buyer's Property. Any designs, tools, patterns, materials, drawings, confidential information or equipment furnished by Buyer or any other items which become Buyer's property, will be considered obsolete and may be destroyed by Seller after two consecutive years have elapsed without Buyer ordering the items manufactured using such property. Seller shall not be responsible for any loss or damage to such property while it is in Seller's possession or control.

9. Special Tooling. A tooling charge may be imposed for any special tooling, including without limitation, dies, fixtures, molds and patterns, acquired to manufacture Products. Such special tooling shall be and remain Seller's property notwithstanding payment of any charges by Buyer. In no event will Buyer acquire any interest in apparatus belonging to Seller which is utilized in the manufacture of the Products, even if such apparatus has been specially converted or adapted for such manufacture and notwithstanding any charges paid by Buyer. Unless otherwise agreed, Seller shall have the right to alter, discard or otherwise dispose of any special tooling or other property in its sole discretion at any time.

10. Buyer's Obligation; Rights of Seller. To secure payment of all sums due or otherwise, Seller shall retain a security interest in the goods delivered and this agreement shall be deemed a Security Agreement under the Uniform Commercial Code. Buyer authorizes Seller as its attorney to execute and file on Buyer's behalf all documents Seller deems necessary to perfect its security interest.

11. Improper use and Indemnity. Buyer shall indemnify, defend, and hold Seller harmless from any claim, liability, damages, lawsuits, and costs (including attorney fees), whether for personal injury, property damage, patent, trademark or copyright infringement or any other claim, brought by or incurred by Buyer, Buyer's employees, or any other person, arising out of: (a) improper selection, improper application or other misuse of Products purchased by Buyer from Seller; (b) any act or omission, negligent or otherwise, of Buyer; (c) Seller's use of patterns, plans, drawings, or specifications furnished by Buyer to manufacture Product; or (d) Buyer's failure to comply with these terms and conditions. Seller shall not indemnify Buyer under any circumstance except as otherwise provided.

12. Cancellations and Changes. Orders shall not be subject to cancellation or change by Buyer for any reason, except with Seller's written consent and upon terms that will indemnify, defend and hold Seller harmless against all direct, incidental and consequential loss or damage. Seller may change product features, specifications, designs and availability with notice to Buyer.

13. Limitation on Assignment. Buyer may not assign its rights or obligations under this agreement without the prior written consent of Seller.

14. Force Majeure. Seller does not assume the risk and shall not be liable for delay or failure to perform any of Seller's obligations by reason of circumstances beyond the reasonable control of Seller (hereinafter "Events of Force Majeure"). Events of Force Majeure shall include without limitation: accidents, strikes or labor disputes, acts of any government or government agency, acts of nature, delays or failures in delivery from carriers or suppliers, shortages of materials, or any other cause beyond Seller's reasonable control.

15. Waiver and Severability. Failure to enforce any provision of this agreement will not waive that provision nor will any such failure prejudice Seller's right to enforce that provision in the future. Invalidation of any provision of this agreement by legislation or other rule of law shall not invalidate any other provision herein. The remaining provisions of this agreement will remain in full force and effect.

16. Termination. Seller may terminate this agreement for any reason and at any time by giving Buyer thirty (30) days written notice of termination. Seller may immediately terminate this agreement, in writing, if Buyer: (a) commits a breach of any provision of this agreement (b) appointments a trustee, receiver or custodian for all or any part of Buyer's property (c) files a petition for relief in bankruptcy on its own behalf, or by a third party (d) makes an assignment for the benefit of creditors, or (e) dissolves or liquidates all or a majority of its assets.

17. Governing Law. This agreement and the sale and delivery of all Products hereunder shall be deemed to have taken place in and shall be governed and construed in accordance with the laws of the State of Ohio, as applicable to contracts executed and wholly performed therein and without regard to conflicts of laws principles. Buyer irrevocably agrees and consents to the exclusive jurisdiction and venue of the courts of Cuyahoga County, Ohio with respect to any dispute, controversy or claim arising out of or relating to this agreement.

18. Indemnity for Infringement of Intellectual Property Rights. Seller shall have no liability for infringement of any patents, trademarks, copyrights, trade dress, trade secrets or similar rights except as provided in this Section. Seller will defend and indemnify Buyer against allegations of infringement of U.S. patents, U.S. trademarks, copyrights, trade dress and trade secrets ("Intellectual Property Rights"). Seller will defend at its expense and will pay the cost of any settlement or damages awarded in an action brought against Buyer based on an allegation that a Product sold pursuant to this Agreement infringes the Intellectual Property Rights of a third party. Seller's obligation to defend and indemnify Buyer is contingent on Buyer notifying Seller within ten (10) days after Buyer becomes aware of such allegations of infringement, and Seller having sole control over the defense of any allegations or actions including all negotiations for settlement or compromise. If a Product is subject to a claim that it infringes the Intellectual Property Rights of a third party, Seller may, at its sole expense and option, procure for Buyer the right to continue using the Product, replace or modify the Product so as to make it noninfringing, or offer to accept return of the Product and return the purchase price less a reasonable allowance for depreciation. Notwithstanding the foregoing, Seller shall have no liability for claims of infringement based on information provided by Buyer, or directed to Products delivered hereunder for which the designs are specified in whole or part by Buyer, or infringements resulting from the modification, combination or use in a system of any Product sold hereunder. The foregoing provisions of this Section shall constitute Seller's sole and exclusive liability and Buyer's sole and exclusive remedy for infringement of Intellectual Property Rights.

19. Entire Agreement. This agreement contains the entire agreement between the Buyer and Seller and constitutes the final, complete and exclusive expression of the terms of sale. All prior or contemporaneous written or oral agreements or negotiations with respect to the subject matter are herein merged.

20. Compliance with Law, U. K. Bribery Act and U.S. Foreign Corrupt Practices Act. Buyer agrees to comply with all applicable laws and regulations, including both those of the United Kingdom and the United States of America, and of the country or countries of the Territory in which Buyer may operate, including without limitation the U. K. Bribery Act, the U.S. Foreign Corrupt Practices Act ("FCPA") and the U.S. Anti-Kickback Act (the "Anti-Kickback Act"), and agrees to indemnify and hold harmless Seller from the consequences of any violation of such provisions by Buyer, its employees or agents. Buyer acknowledges that they are familiar with the provisions of the U. K. Bribery Act, the FCPA and the Anti-Kickback Act, and certifies that Buyer will adhere to the requirements thereof. In particular, Buyer represents and agrees that Buyer shall not make any payment or give anything of value, directly or indirectly to any governmental official, any foreign political party or official thereof, any candidate for foreign political office, or any commercial entity or person, for the purpose of influencing such person to purchase products or otherwise benefit the business of Seller.

07/14

Parker Hannifin Corporation
Chelsea Products Division
Olive Branch, MS 38654 USA

Parker Worldwide

Europe, Middle East, Africa

AE – United Arab Emirates, Dubai
Tel: +971 4 8127100
parker.me@parker.com

AT – Austria, Wiener Neustadt
Tel: +43 (0)2622 23501-0
parker.austria@parker.com

AT – Eastern Europe, Wiener Neustadt
Tel: +43 (0)2622 23501 900
parker.easteurope@parker.com

AZ – Azerbaijan, Baku
Tel: +994 50 22 33 458
parker.azerbaijan@parker.com

BE/LU – Belgium, Nivelles
Tel: +32 (0)67 280 900
parker.belgium@parker.com

BG – Bulgaria, Sofia
Tel: +359 2 980 1344
parker.bulgaria@parker.com

BY – Belarus, Minsk
Tel: +375 17 209 9399
parker.belarus@parker.com

CH – Switzerland, Etoy
Tel: +41 (0)21 821 87 00
parker.switzerland@parker.com

CZ – Czech Republic, Klecany
Tel: +420 284 083 111
parker.czechrepublic@parker.com

DE – Germany, Kaarst
Tel: +49 (0)2131 4016 0
parker.germany@parker.com

DK – Denmark, Ballerup
Tel: +45 43 56 04 00
parker.denmark@parker.com

ES – Spain, Madrid
Tel: +34 902 330 001
parker.spain@parker.com

FI – Finland, Vantaa
Tel: +358 (0)20 753 2500
parker.finland@parker.com

FR – France, Contamine s/Arve
Tel: +33 (0)4 50 25 80 25
parker.france@parker.com

GR – Greece, Athens
Tel: +30 210 933 6450
parker.greece@parker.com

HU – Hungary, Budaoers
Tel: +36 23 885 470
parker.hungary@parker.com

IE – Ireland, Dublin
Tel: +353 (0)1 466 6370
parker.ireland@parker.com

IT – Italy, Corisico (MI)
Tel: +39 02 45 19 21
parker.italy@parker.com

KZ – Kazakhstan, Almaty
Tel: +7 7273 561 000
parker.easteurope@parker.com

NL – The Netherlands, Oldenzaal
Tel: +31 (0)541 585 000
parker.nl@parker.com

NO – Norway, Asker
Tel: +47 66 75 34 00
parker.norway@parker.com

PL – Poland, Warsaw
Tel: +48 (0)22 573 24 00
parker.poland@parker.com

PT – Portugal, Leca de Palmeira
Tel: +351 22 999 7360
parker.portugal@parker.com

RO – Romania, Bucharest
Tel: +40 21 252 1382
parker.romania@parker.com

RU – Russia, Moscow
Tel: +7 495 645-2156
parker.russia@parker.com

SE – Sweden, Spånga
Tel: +46 (0)8 59 79 50 00
parker.sweden@parker.com

SK – Slovakia, Banská Bystrica
Tel: +421 484 162 252
parker.slovakia@parker.com

SL – Slovenia, Novo Mesto
Tel: +386 7 337 6650
parker.slovenia@parker.com

TR – Turkey, Istanbul
Tel: +90 216 4997081
parker.turkey@parker.com

UA – Ukraine, Kiev
Tel: +380 44 494 2731
parker.ukraine@parker.com

UK – United Kingdom, Warwick
Tel: +44 (0)1926 317 878
parker.uk@parker.com

ZA – South Africa, Kempton Park
Tel: +27 (0)11 961 0700
parker.southafrica@parker.com

North America

CA – Canada, Milton, Ontario
Tel: +1 905 693 3000

MX – Mexico, Toluca
Tel: +52 72 2275 4200

Asia Pacific

AU – Australia, Castle Hill
Tel: +61 (0)2-9634 7777

CN – China, Shanghai
Tel: +86 21 2899 5000

HK – Hong Kong
Tel: +852 2428 8008

IN – India, Mumbai
Tel: +91 22 6513 7081-85

JP – Japan, Fujisawa
Tel: +81 (0)4 6635 3050

KR – South Korea, Seoul
Tel: +82 2 559 0400

MY – Malaysia, Shah Alam
Tel: +60 3 7849 0800

NZ – New Zealand, Mt Wellington
Tel: +64 9 574 1744

SG – Singapore
Tel: +65 6887 6300

TH – Thailand, Bangkok
Tel: +662 717 8140

TW – Taiwan, New Taipei City
Tel: +886 2 2298 8987

South America

AR – Argentina, Buenos Aires
Tel: +54 3327 44 4129

BR – Brazil, Cachoeirinha RS
Tel: +55 51 3470 9144

CL – Chile, Santiago
Tel: +56 2 623 1216

Pan Am, Miami
Tel: +1 305-470-8800

Parker Hannifin Corporation
Chelsea Products Division
8225 Hacks Cross Road
Olive Branch, Mississippi 38654 USA
www.parker.com/chelsea

HW 04/18 6M

Parker | Chelsea