Effective: HY25-1806-M1/US June 2019
Supersedes: HY25-1806-M1/US February 2019

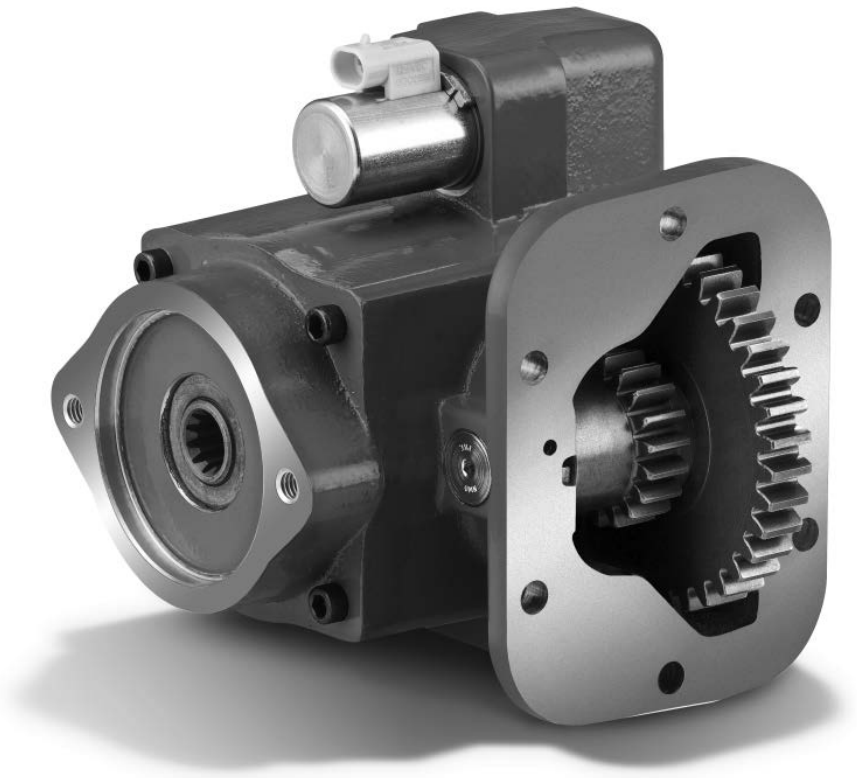

Power Take-Offs Owner's Manual

252 Series

Parker Chelsea

ENGINEERING YOUR SUCCESS.

⚠ WARNING — User Responsibility

FAILURE OR IMPROPER SELECTION OR IMPROPER USE OF THE PRODUCTS DESCRIBED HEREIN OR RELATED ITEMS CAN CAUSE DEATH, PERSONAL INJURY AND PROPERTY DAMAGE.

This document and other information from Parker Hannifin Corporation, its subsidiaries and authorized distributors provide product or system options for further investigation by users having technical expertise.

The user, through its own analysis and testing, is solely responsible for making the final selection of the system and components and assuring that all performance, endurance, maintenance, safety and warning requirements of the application are met. The user must analyze all aspects of the application, follow applicable industry standards, and follow the information concerning the product in the current product catalog and in any other materials provided from Parker or its subsidiaries or authorized distributors.

To the extent that Parker or its subsidiaries or authorized distributors provide component or system options based upon data or specifications provided by the user, the user is responsible for determining that such data and specifications are suitable and sufficient for all applications and reasonably foreseeable uses of the components or systems.

Offer of Sale

The items described in this document are hereby offered for sale by Parker Hannifin Corporation, its subsidiaries or its authorized distributors. This offer and its acceptance are governed by the provisions stated in the "Offer of Sale".

⚠ **WARNING:** This product can expose you to chemicals including Lead and Lead Compounds, and Di(2-ethylhexyl)phthalate (DEHP) which are known to the State of California to cause cancer and birth defects or other reproductive harm. For more information go to www.P65Warnings.ca.gov

© Copyright 2019, Parker Hannifin Corporation, All Rights Reserved

Parker Hannifin Corporation
Chelsea Products Division
Olive Branch, MS 38654 USA

General Information
Foreword 1
Safety Information 1-3
Chelsea PTO Safety Label Instructions 3
Pump Support Requirements 4
Function of Auxiliary Power Shafts 5
Spicer® Universal Joint Engineering Data 6
Allison Installation
Pre-Pump Installation 8
PTO Installation
GM 3600 Chassis 9-13
Allison 1000, 2000/2500 14-16
Installation Sketches
Allison Transmission 1000, 2000/2500 (12V) w/out Speed Limiter (Sk-456 Rev D) 17
Dodge/Sterling/Ram Installation
Dodge/Sterling Overview (MY2010 & Prior) 20
RAM Overview (MY2011 & MY2012) 21-22
RAM Overview (MY2013 & Later) 23-25
Pre Installation Overview 26-27
Heavy Duty PTO Installation Instructions 28-29
Chassis Cab Wiring Reference (MY2011 & Later) 30
Installation Sketches
Dodge/AISIN MY2007 - MY2010 (AS68RC) Transmission Shift Option D (SK-455 Rev B) 31
Wiring Charts (MY2007 - MY2010) 32
AISIN (AS69RC/AS66RC) MY2011 & Later Transmission w/o EOC Shift Option R (SK-495) 33
RAM/AISIN (AS69RC) MY2013 & Later Transmission w/o EOC Shift Option R (SK-567) 34
Wiring Installation Instructions (MY2011 and Later) 35-36
PTO Maintenance 37
Offer of Sale 39

Parker Hannifin Corporation
Chelsea Products Division
Olive Branch, MS 38654 USA

Parker Hannifin Corporation
Chelsea Products Division
Olive Branch, MS 38654 USA

Foreword

This booklet will provide you with information on correct installation of Chelsea® Power Take-Offs (PTOs). Proper installation and set up procedures will help you get additional and more profitable miles from your truck equipment and components.

It is important that you be sure that you are getting the right transmission/PTO combination when you order a new truck. An inadequate transmission will overwork any PTO in a short period of time. In addition, a mismatched transmission and PTO combination can result in unsatisfactory performance of your auxiliary power system from the start.

If you have questions regarding correct PTO and transmission combination, please contact your local Chelsea® Auxiliary Power Specialist. They can help you select the properly matched components to ensure correct and efficient applications.

Safety Information

These instructions are intended for the safety of the installer, operator & supporting personnel. Read them carefully until you understand them.

General Safety Information

To prevent injury to yourself and/or damage to the equipment:

- Read carefully all owner's manuals, service manuals, and/or other instructions.
- Always follow proper procedures, and use proper tools and safety equipment.
- Be sure to receive proper training.
- Never work alone while under a vehicle or while repairing or maintaining equipment.
- Always use proper components in applications for which they are approved.
- Be sure to assemble components properly.
- Never use worn-out or damaged components.
- Always block any raised or moving device that may injure a person working on or under a vehicle.
- Never operate the controls of the Power Take-Off or other driven equipment from any position that could result in getting caught in the moving machinery.

Proper Matching of PTO

WARNING: A Power Take-Off must be properly matched to the vehicle transmission and to the auxiliary equipment being powered. An improperly matched Power Take-Off could cause severe damage to the vehicle transmission, the auxiliary driveshaft, and/or to the auxiliary equipment being powered. **Damaged components or equipment could malfunction causing serious personal injury to the vehicle operator or to others nearby.**

To avoid personal injury and/or equipment damage:

- Always refer to Chelsea catalogs, literature, and owner's manuals and follow Chelsea recommendations when selecting, installing, repairing, or operating a Power Take-Off.
- Never attempt to use a Power Take-Off not specifically recommended by Chelsea for the vehicle transmission.
- Always match the Power Take-Off's specified output capabilities to the requirements of the equipment to be powered.
- Never use a Power Take-Off whose range of speed could exceed the maximum.

This symbol warns of possible personal injury.

Parker Hannifin Corporation
Chelsea Products Division
Olive Branch, MS 38654 USA

Safety Information (Continued)

Cold Weather Operation of PowerShift PTO

WARNING: During extreme cold weather operation [32°F (0°C) and lower], a disengaged PowerShift Power Take-Off can momentarily transmit high torque that will cause unexpected output shaft rotation. This is caused by the high viscosity of the transmission oil when it is extremely cold. As slippage occurs between the Power Take-Off clutch plates, the oil will rapidly heat up and the viscous drag will quickly decrease.

The Power Take-Off output shaft rotation could cause unexpected movement of the driven equipment resulting in serious personal injury, death, or equipment damage.

To avoid personal injury or equipment damage:

- Driven equipment must have separate controls.
- The driven equipment must be left in the disengaged position when not in operation.
- Do not operate the driven equipment until the vehicle is allowed to warm up.

Rotating Auxiliary Driveshafts

WARNING:

- Rotating auxiliary driveshafts are dangerous. You can snag clothes, skin, hair, hands, etc. This can cause serious injury or death.
- Do not go under the vehicle when the engine is running.
- Do not work on or near an exposed shaft when the engine is running.
- Shut off the engine before working on the Power Take-Off or driven equipment.
- Exposed rotating driveshafts must be guarded.

Guarding Auxiliary Driveshafts

WARNING: We strongly recommend that a Power Take-Off and a directly mounted pump be used to eliminate the auxiliary driveshaft whenever possible. If an auxiliary driveshaft is used and remains exposed after installation, it is the responsibility of the vehicle designer and PTO installer to install a guard.

Using Set Screws

WARNING: Auxiliary driveshafts may be installed with either recessed or protruding set screws. If you choose a square head set screw, you should be aware that it will protrude above the hub of the yoke and may be a point where clothes, skin, hair, hands, etc. could be snagged. A socket head set screw, which may not protrude above the hub of the yoke, does not permit the same amount of torquing as does a square head set screw. Also, a square head set screw, if used with a lock wire, will prevent loosening of the screw caused by vibration. Regardless of the choice made with respect to a set screw, an exposed rotating auxiliary driveshaft must be guarded.

IMPORTANT: Safety Information and Owner's Manual

Chelsea Power Take-Offs are packaged with safety information decals, instructions, and an owner's manual. These items are located in the envelope with the PTO mounting gaskets. Also, safety information and installation instructions are packaged with some individual parts and kits. **Be sure to read the owner's manual before installing or operating the PTO.** Always install the safety information decals according to the instructions provided. Place the owner's manual in the vehicle glove compartment.

This symbol warns of possible personal injury.

Parker Hannifin Corporation
Chelsea Products Division
Olive Branch, MS 38654 USA

Safety Information (Continued)

⚠ WARNING: Operating the PTO with the Vehicle in Motion

Some Power Take-Offs may be operated when the vehicle is in motion. To do so, the PTO must have been properly selected to operate at highway speeds and correctly matched to the vehicle transmission and the requirements of the driven equipment.

If in doubt about the PTO specifications and capabilities, avoid operating the PTO when the vehicle is in motion. Improper application and/or operation can cause serious personal injury or premature failure of the vehicle, the driven equipment, and/or the PTO.

Always remember to disengage the PTO when the driven equipment is not in operation.

Chelsea PTO Safety Label Instructions

1. The two black and orange on white 5" x 7" pressure sensitive vinyl labels, part number 379274, must be placed on the vehicle frame rails (one (1) on each side), in a position that would be **HIGHLY** visible to anyone that would go under the truck near the PTO rotating shaft. If the vehicle is to be painted after these labels are installed, cover them with two (2) blank masking covers. Remove the masking covers after painting.
2. Place the one (1) black and orange on white 3.5" x 5" pressure sensitive vinyl label, part number 379275, on the visor nearest the operator of the vehicle, this must be placed near the PTO visor label.
3. Place the one (1) red and white with black lettering 3.5" x 7" pressure sensitive vinyl label, part number 379915, on the opposite side of the visor from the above label part number 379275.
4. Place the one (1) white and black heavy duty card, part number 379276, in the vehicle glove box in a position highly visible to the operator. For example, try to place this card on top of whatever may be in the glove box.

If you require labels, please order part number 328946X at no charge from your local Chelsea Warehouse or send request direct to:

Parker Hannifin Corporation
Chelsea Products Division
8225 Hacks Cross Road
Olive Branch, MS 38654
Customer Service: (662) 895-1011

Part #379276

Part #379275

Part #379915

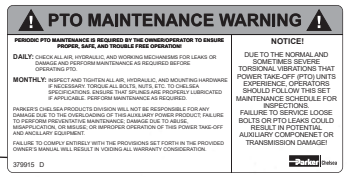

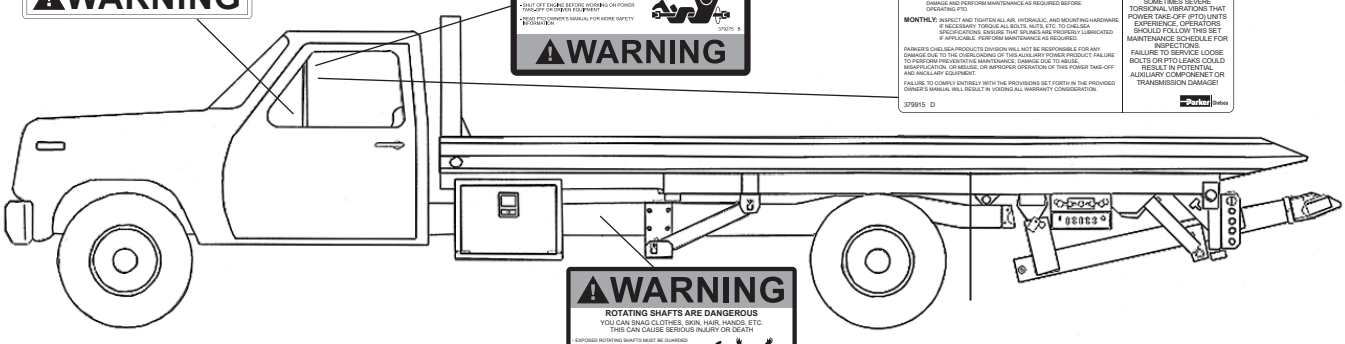

Part #379274

⚠ **This symbol warns of possible personal injury.**

Parker Hannifin Corporation
Chelsea Products Division
Olive Branch, MS 38654 USA

Direct Mount Pump Support Requirements (Universal)

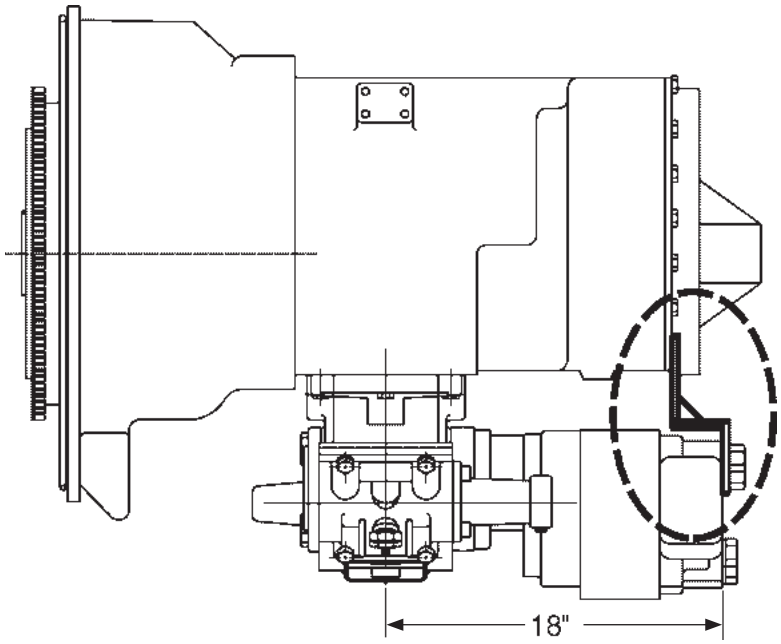

NOTE:
For Proper Bracketing, Attach at 2 or More Transmission Bolt Locations and 2 or More Pump Locations. Contact Transmission Manufacturer for Proper Bracket Mounting Locations.

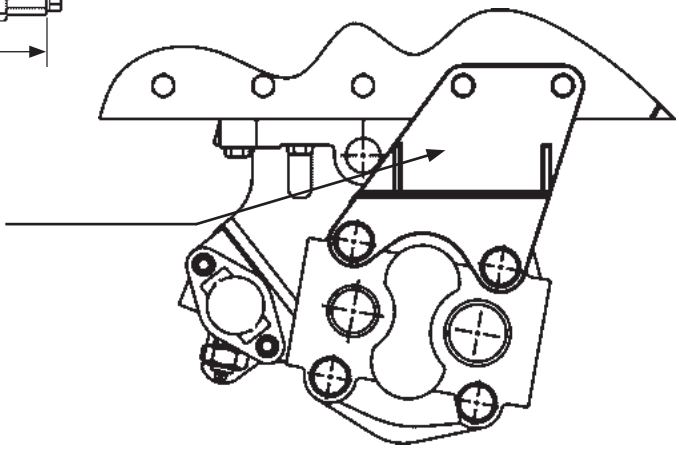

Use CAUTION to ensure the support bracket does not pre-load pump / PTO mounting. When mounting the pump, it should be fully supported by a jack until the support bracket is secured in place, then the jack can be released. This will make sure the PTO is not being stressed by the bracket.

Chelsea requires the use of pump supports (Support Brackets) in all applications to ensure the Maximum Bending Moment (MBM) of the PTO / Pump assembly is not exceeded. Exceeding the MBM can result in damage to PTO, transmission, driven equipment, and / or personnel. It is the responsibility of the installer to ensure that adequate support is implemented. All applications are unique and it is important to consider all parameters in designing a proper support bracket.

PTO warranty will be void if a pump bracket is not used when one of the following conditions are present:

1. The combined weight of pump, fittings and hose exceed 40 pounds [18.14 kg].

2. The combined length of the PTO and pump is 18 inches [45.72 cm] or more from the PTO centerline to the end of the pump.

ALSO: Remember to pack the female PTO shaft with grease before installing the pump on the PTO (reference Chelsea grease pack 379688).

This symbol warns of possible personal injury.

Parker Hannifin Corporation
Chelsea Products Division
Olive Branch, MS 38654 USA

Function of Auxiliary Power Shafts

An auxiliary power shaft transmits torque from the power source to the driven accessory. The shaft must be capable of transmitting the maximum torque and RPM required of the accessory, plus any shock loads that develop.

An auxiliary power shaft operates through constantly relative angles between the power source and the driven accessory. Therefore, the length of the auxiliary power shaft must be capable of changing while transmitting torque. This length change, commonly called "slip movement", is caused by movement of the powertrain due to torque reactions and chassis deflections.

Joint operating angles are very important in an auxiliary power shaft application. In many cases, the longevity of a joint is dependent on the operating angles. (See chart below)

This information is limited to 1000 through 1310 Series applications. For applications requiring a series larger than 1310, contact your local Chelsea distributor.

Determining Shaft Type

1) Solid or tubular?
   a) In applications requiring more than 1000 RPM or where the application necessitates a highly balanced auxiliary power shaft, a tubular shaft should be used.
   b) Spicer's solid shafting auxiliary power joints are designed for 1000 or less RPM intermittent service such as:
      Driving small hydraulic pumps
      Driving winches
      Driving low speed product pumps
2) Joint Series should be determined using the chart on the following page.

SPICER® UNIVERSAL JOINT OPERATING ANGLES			
Prop. Shaft RPM	**Max. Normal Operating Angle**	**Prop. Shaft RPM**	**Max. Normal Operating Angle**
3000	5° 50'	1500	11° 30'
2500	7° 00'	1000	11° 30'
2000	8° 40'	500	11° 30'
Above based on angular acceleration of 100 RAD/SEC^2			

Parker Hannifin Corporation
Chelsea Products Division
Olive Branch, MS 38654 USA

Spicer® Universal Joint Engineering Data

Joint Series	**1000**	**1100**	**1280**	**1310**
Torque Rating				
Automotive (Gas or Diesel Engine) lbs-ft Continuous	50	54	95	130
Tubing				
Diameter	1.750"	1.250"	2.500"	3.00"
Wall Thickness	.065"	.095"	.083"	.083'
W = Welded S = Seamless	W	S	W	W
Flange Diameter (Swing Diameter)				
Rectangular Type	3.500"	3.500"	3.875"	3.875"
Bolt Holes - Flange Yoke				
Circle	2.750"	2.750"	3.125"	3.125"
Diameter	.312"	.312"	.375"	.375"
Number	4	4	4	4
Male Pilot Dia.	2.250"	2.250"	2.375"	2.375"
Distance Across Lugs				
Snap Ring	2.188"	2.656"	3.469"	3.469"
Construction	2.188"	2.656"	3.469"	3.469"
Bearing Diameter	.938"	.938"	1.062"	1.062"

Maximum Operating Speed * By Tube Size, Solid Shaft Size, and Length
***(For speed below 500 RPM or over 2500 RPM, contact your Chelsea Distributor)**

Tubing Dia. & Wall Thickness Joint & Shaft (W=Welded S=Seamless)	Max. Installed Length in Inches for Given RPM Centerline to Centerline of Joints for a Two Joint Assembly or Centerline of Joint to Centerline of Center Bearing for a Joint & Shaft RPM - Revolutions per Minute				
	500	**1000**	**1500**	**2000**	**2500**
1.750" x .065" W	117"	82"	67"	58"	52"
1.250" x .095" S	91"	64"	52"	45"	40"
2.500" x .083" W	122"	87"	70"	62"	55"
3.000" x .083" W	-	-	-	85"	76"
Solid Shaft Diameter					
.750"	60"	42"	35"	30"	27"
.812"	62"	44"	36"	31"	28"
.875"	65"	46"	37"	32"	29"
1.000"	69"	49"	40"	35"	31"
1.250"	77"	55"	45"	39"	35"

Parker Hannifin Corporation
Chelsea Products Division
Olive Branch, MS 38654 USA

ALLISON

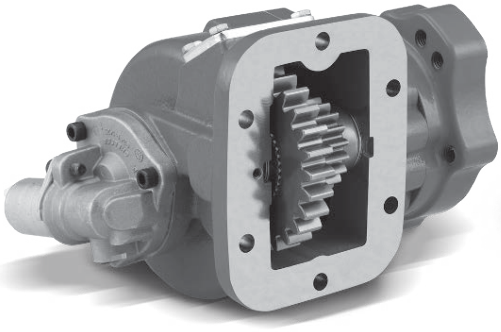

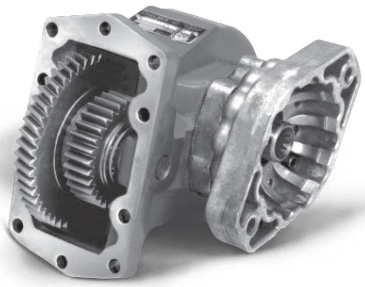

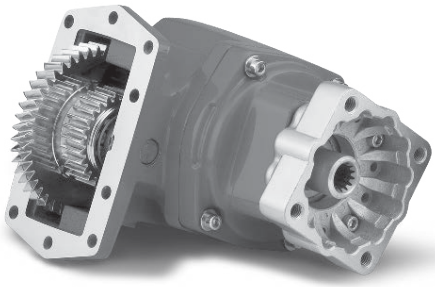

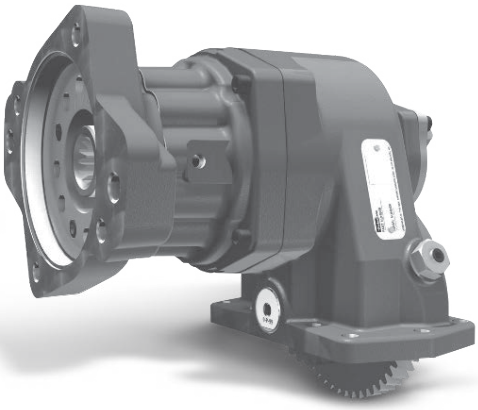

Parker Hannifin Corporation
Chelsea Products Division
Olive Branch, MS 38654 USA

Installing Pump to PTO

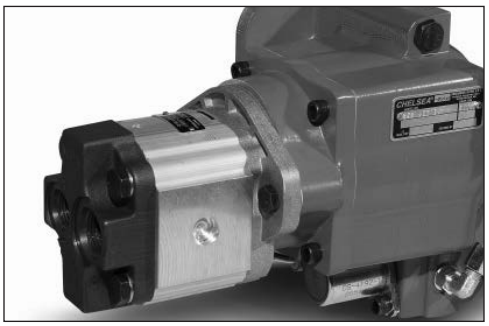

1. When installing the 252 Series on either the Allison or Aisin Transmission one recommendation is to install the Commercial Pump prior to Power Take-Off (PTO) installation.

2. If the Commercial Pump was ordered with the Power Take-Off it will come with a Pump Installation Kit 329296-4X. This kit will include two bolts (378431-11) for mounting the pump to the PTO and a small packet of anti-fretting grease (379688).

3. Before installing the pump to the PTO apply grease to the PTO female splined shaft and to the male pump shaft.

4. Install to pump to the PTO using the bolts provided with the kit. Torque the two pump bolts to 32-37 Lbs-ft [45-50 Nm].

5. You are now ready to install the Power Take-Off to the Transmission.

6. Steps 3 & 4 should be followed even if the pump is not installed at this time, but after the PTO is mounted to the transmission.

PTO Installation
GM 3600 Chassis

1. Before installing the PTO to the transmission, you may need to remove the two exhaust pipes that are on the right passenger side of the vehicle and next to the Power Take-Off opening (**Fig. 1**). View is an Extended Cab with L18 engine exhaust.

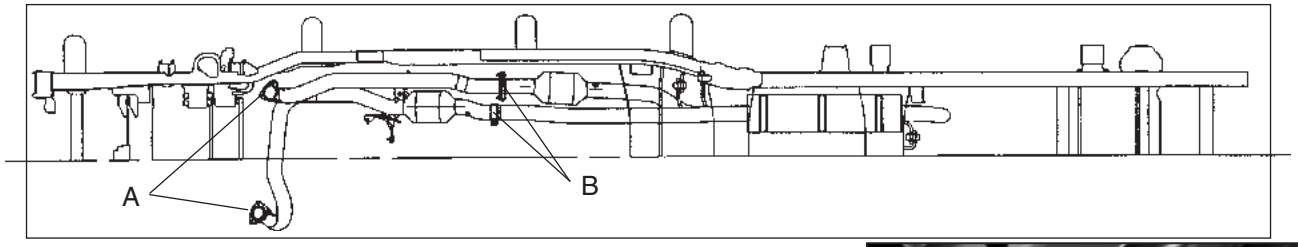

Fig. 1

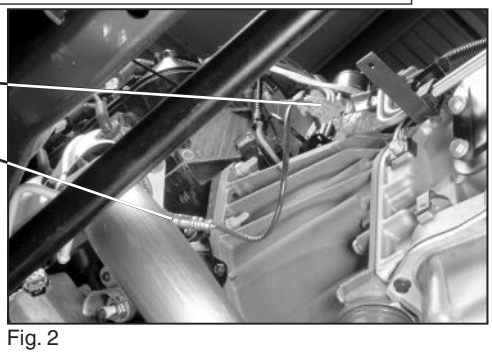

Fig. 2

2. Disconnect the connection for the oxygen sensor or remove the oxygen sensor from the exhaust pipe (**Fig. 2**). Next remove the three (3) bolts that secure the exhaust pipe to the exhaust pipe header (A) in (**Fig. 1**) (**Fig. 3**).

   This should be done for the left and right exhaust pipes. Remove the attaching bolts for each exhaust pipe at the rear attaching flange (B) in (**Fig. 1**).

Fig. 3

3. Remove the lower transmission heat shield [1] and PTO aperture plate [2] from the transmission (**Figs. 4 & 5**).

NOTE: Make sure aperture surface is clean and dry before proceeding.

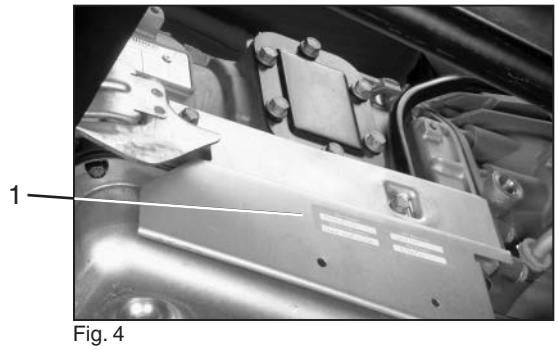

Fig. 4

Fig. 5

Parker Hannifin Corporation
Chelsea Products Division
Olive Branch, MS 38654 USA

PTO Installation
GM 3600 Chassis (Continued)

4. Install the proper studs (379428-14 furnished with PTO) in the PTO aperture pad. The stud kit furnished with the PTO contains five (5) studs and one (1) cap screw and have pre-applied locking/ sealing compound. Do not install a stud in the top hole on the aperture pad, this is for the cap screw (See **Fig. 6**) for proper placement of studs. Tighten studs securely and torque to 17-19 Lbs-ft (23.05-25.76 Nm).

Fig. 6

CAUTION: Over tightening of studs may damage stud and/or transmission threads.

5. Place the gasket (35-P-41) provided with the PTO over the studs (**Fig. 7**). Only one gasket is required because the 252 Series PTO does not require the backlash to be set.

Fig. 7

6. Secure the PTO & Pump to the transmission. Install the long bolt to the top hole in the PTO and the flange nuts (provided with the PTO) to the studs (**Fig. 8**).

NOTE: Flange nuts do not require lock washers.

7. Fasten the Power Take-Off to the transmission. Torque the five (5) flange nuts (379744) to 35-40 Lbs-ft [47-54 Nm].

   Torque the cap screw (379578-48) to 30-35 Lbs-ft [41-47 Nm]

Fig. 8

Parker Hannifin Corporation
Chelsea Products Division
Olive Branch, MS 38654 USA

PTO Installation
GM 3600 Chassis (Continued)

8. Next we will move to the installation of the plumbing. Remove the transmission oil filter located on the lower left side of the transmission (**Fig. 9**). Next remove the main pressure port plug next to the filter and install the 90° O-Ring fitting (379486). (**Fig. 10**)

WARNING: Oil may be hot. Use extreme caution to ensure that you do not accidentally come in contact with hot oil.

Fig. 9

9. Attach the hydraulic hose to the transmission main pressure port. Fitting as shown in (**Fig. 11**). Re-install the filter at this time.

   Next attach the other end of the hose to the PTO 90° O-Ring fitting (379486) as shown in (**Fig. 12**)

Fig. 10

Fig. 11

Fig. 12

This symbol warns of possible personal injury.

Parker Hannifin Corporation
Chelsea Products Division
Olive Branch, MS 38654 USA

PTO Installation
GM 3600 Chassis (Continued)

10. Reattach the OE supplied transmission heat shield to the bottom of the transmission. Torque the bolts to 13 lbs-ft [17 Nm] (**Fig. 13**).

Fig. 13

Model Year 2007-2015 GM 3600 Series Wiring Harness - 252 Series

11. For 2007-2014 model year C/K Series 3500 trucks equipped with Allison 1000, 2000/2500 transmission, Chelsea wiring harness 329620X is required to complete the truck to Power Take-Off (PTO) interface. For MY2015 - Later, use 75-P-33.

12. Pressure switch connections (**Fig. 14**).
Grey w/green connector to grey pressure switch connector.

Fig. 14

13. Solenoid valve connections (**Fig. 15**).
Grey w/blue connector to white solenoid connector.

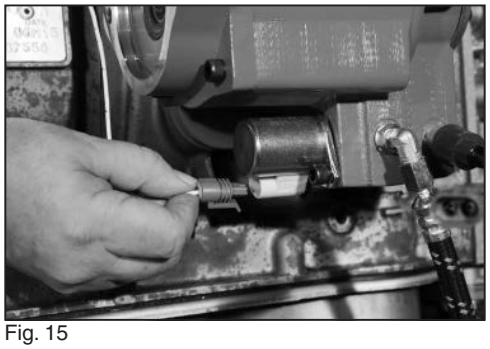
Fig. 15

NOTE: After installing the PTO and harness, all trucks will need to be reprogrammed by a GM dealer. The PTO Load Feedback and PTO Engage Relay functions need to be reset to ENABLE before the system will function properly.

To change Stationary Preset PTO to Stationary Variable PTO or Mobile Variable PTO the BCM (Body Control Module) must be reprogrammed.

GM UI (Upfitter Integration) Bulletin #80 is recommended to assist installers and end-users in understanding the PTO system on these trucks. (www.gmupfitter.com)

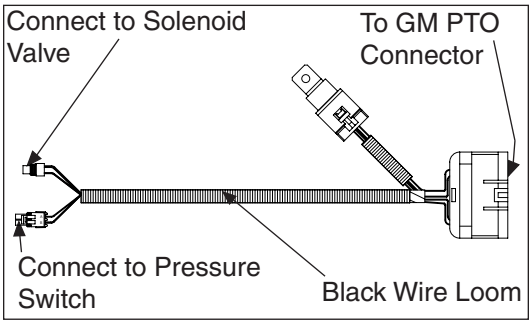

Part Number 329620X – MY2007 - 2014
Part Number 75-P-33 – MY2015 - Later

Parker Hannifin Corporation
Chelsea Products Division
Olive Branch, MS 38654 USA

PTO Installation
GM 3600 Chassis (Continued)

14. Reinstall the two engine exhaust pipes at this time. Torque the rear flange bolts to 30 lbs-ft [40 Nm] and the exhaust manifold pipe nuts to 39 lbs-ft [50 Nm] (**Fig. 16**).

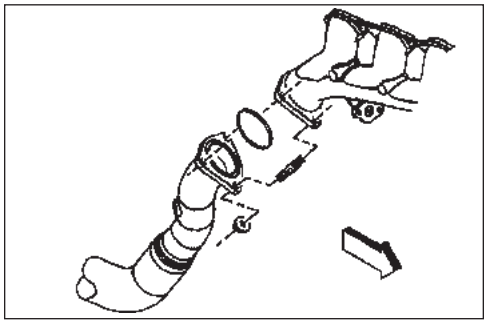

Fig. 16

15. Reattach the oxygen sensor at this time also. If the oxygen sensor was removed at the pipe, torque to 31 lbs-ft [42 Nm]. If the sensor was disconnected at the plug, snap back into place (**Fig. 17**).

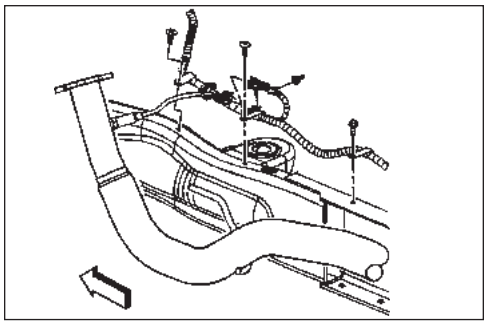

Fig. 17

Parker Hannifin Corporation
Chelsea Products Division
Olive Branch, MS 38654 USA

PTO Installation
Allison 1000, 2000/2500

1. Remove PTO aperture plate from the transmission (**Fig. 18**).

WARNING: Oil may be hot. Use extreme caution to ensure that you do not accidentally come in contact with hot oil.

NOTE: Make sure aperture surface is clean and dry before proceeding.

Fig. 18

2. Install the proper studs (379428-14 furnished with PTO) in the PTO aperture pad. The stud kit furnished with the PTO contains five (5) studs and one (1) cap screw and have pre-applied locking/ sealing compound. Do not install a stud in the top hole on the aperture pad, this is for the cap screw (See **Fig. 19**) for proper placement of studs. Tighten studs securely and torque to 17-19 lbs-ft (23-25 Nm).

CAUTION: Over tightening of studs may damage stud and/or transmission threads.

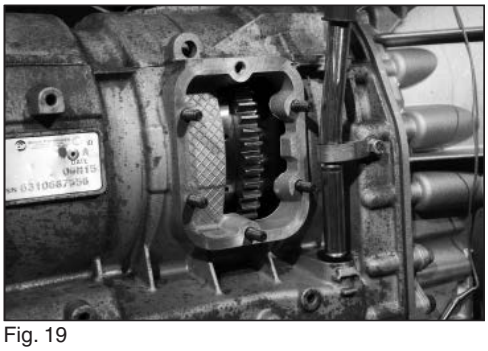
Fig. 19

3. Place the gasket (35-P-41) provided with the PTO over the studs (**Fig. 20**). Only one gasket is required because the 252 Series PTO does not require the backlash to be set.

4. Secure the PTO & Pump to the transmission. Install the long bolt to the top hole in the PTO and the flange nuts (provided with the PTO) to the studs (**Fig. 21**).

NOTE: Flange nuts do not require lock washers.

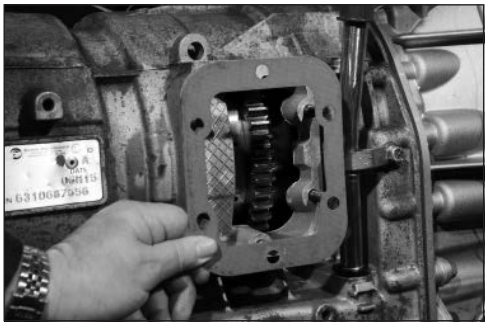
Fig. 20

5. Fasten the Power Take-Off to the transmission. Torque the five (5) flange nuts (379744) to 35-40 lbs-ft [47-54 Nm].

   Torque the cap screw (379578-48) to 30-35 lbs-ft [41-47 Nm].

Fig. 21

This symbol warns of possible personal injury.

Parker Hannifin Corporation
Chelsea Products Division
Olive Branch, MS 38654 USA

PTO Installation
Allison 1000, 2000/2500 (Continued)

6. Remove the transmission oil filter located on the lower left side of the transmission (**Fig. 22**). Next remove the main pressure port plug next to the filter and install the 90° O-Ring fitting (379486) (**Fig. 23**).

WARNING: Oil may be hot. Use extreme caution to ensure that you do not accidentally come in contact with hot oil.

7. Attach the hydraulic hose to the transmission main pressure port. Fitting as shown in (**Fig. 24**). Re-install the filter at this time.

   Next attach the other end of the hose to the PTO 90° O-Ring fitting (379486) as shown in (**Fig. 25**).

Fig. 22

Fig. 23

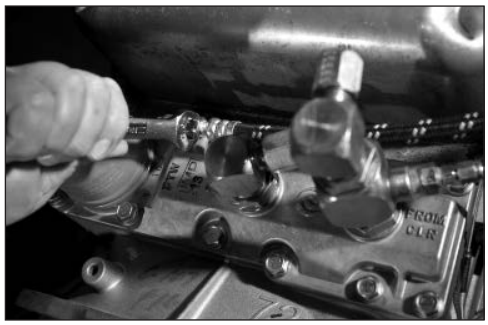
Fig. 24

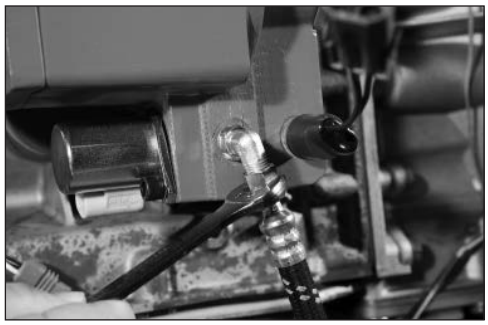
Fig. 25

This symbol warns of possible personal injury.

Parker Hannifin Corporation
Chelsea Products Division
Olive Branch, MS 38654 USA

PTO Installation
Allison 1000, 2000/2500 (Continued)

NOTE: If using the GM provided in-dash switch, skip to item # 9.

8. Install the PTO rocker switch and bracket in the cab. Under the vehicle connect the two Packard connectors.

   A) The gray w/green male harness connector to the gray pressure female connector (**Fig. 26**).

   B) The gray male w/blue connector to the white solenoid female connector (**Fig. 27**).

   C) Route the other end of the Chelsea wiring over the transmission and into the cab and connect wires as illustrated on page 17.

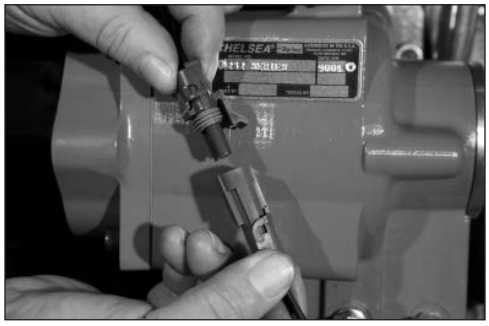

Fig. 26

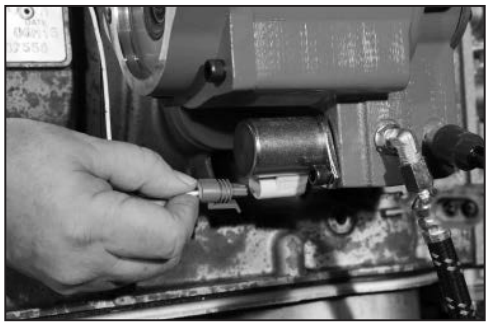
Fig. 27

GM C/K Series PTO Wiring Harness

9. For model year 2003 and higher GM C/K Series 4500, 5500, 6500, 7500 and 8500 trucks may be equipped with the Allison 1000, 2000/2500 transmissions. In these vehicles GM Truck has integrated a PTO connector, located in the right hand engine compartment area. A Power Take-Off switch has also been incorporated into the GM dash panel to control PTO operation. With the PTO option ordered on the truck, the PTO connector and in-dash switch simplify the interface for the body builder.

   In order for the customer to utilize the full capability of the PTO/transmission, Chelsea has designed a wiring harness that must be used between the GM PTO connector and the Chelsea Power Take-Off. These are for PTO Non EOC applications only.

   The main purpose of the wiring harness on the Allison 1000, 2000/2500 transmissions will be to engage the torque converter lock-up clutch. The harness will also allow the end-user to utilize the stalk-mounted cruise control to control Power Take-Off RPM.

MY2003 - 2006	Use Wiring Harness 329619X
MY2007 - 2014	Use Wiring Harness 329620X
MY2015 - Later	Use Wiring harness 75-P-33

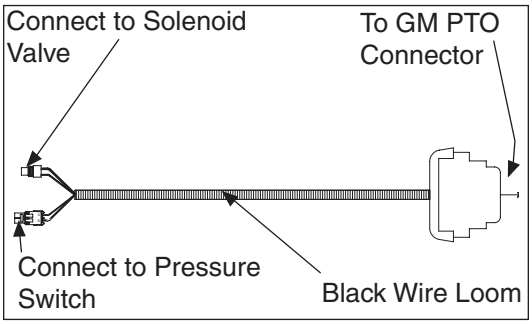

Part Number 329619X – MY2003 - 2006

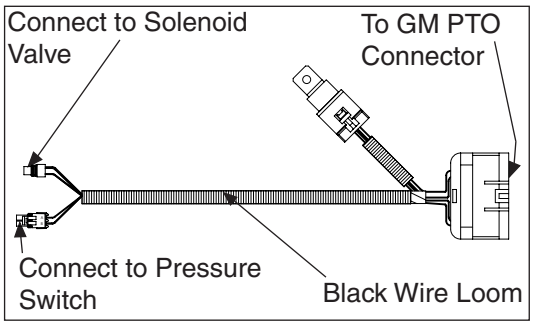

Part Number 329620X – MY2007 - 2014
Part Number 75-P-33 – MY2015 - Later

NOTE: For 2006 Model Year Chev. Kodiak and GMC Topkick C4500-C7500 Series with 6.6L Diesel or 8.1L Gas engines and Allison 1000/2200/2300 Series transmission. The PTO may not operate properly due to a GM change in feedback logic in the TCM. Please refer to GM UI Bulletin#76 REV. 1 dated 6/09/2006 or latest revision for complete details.

Parker Hannifin Corporation
Chelsea Products Division
Olive Branch, MS 38654 USA

Allison Transmission 1000, 2000/2500 (12V) w/o Speed Limiter 252 Series

(SK-456 Rev D)

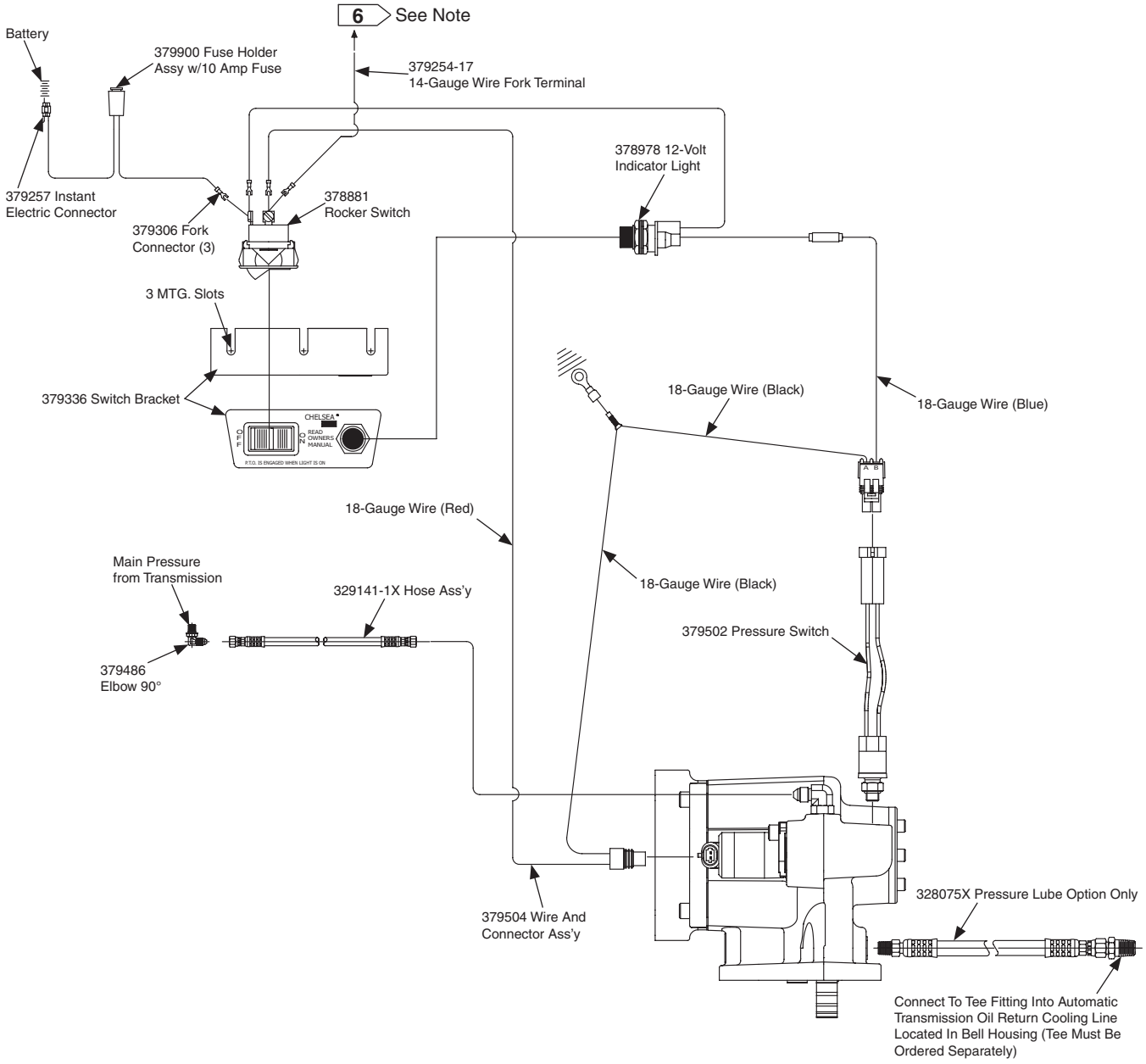

6 To maintain proper hydraulic pressure to PTO clutch, connect Chelsea specified wire to Allison "PTO Request" circuit wire/pin within transmission TCM. Location of PTO Request wire/pin is dependant on Transmission Location Code. For assistance, contact your local Allison representative or contact Allison Technical Assistance at 1-800-252-5283.

Parker Hannifin Corporation
Chelsea Products Division
Olive Branch, MS 38654 USA

Notes

Parker Hannifin Corporation
Chelsea Products Division
Olive Branch, MS 38654 USA

DODGE/RAM

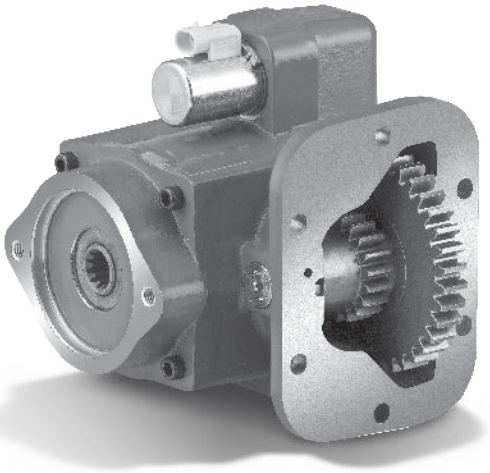

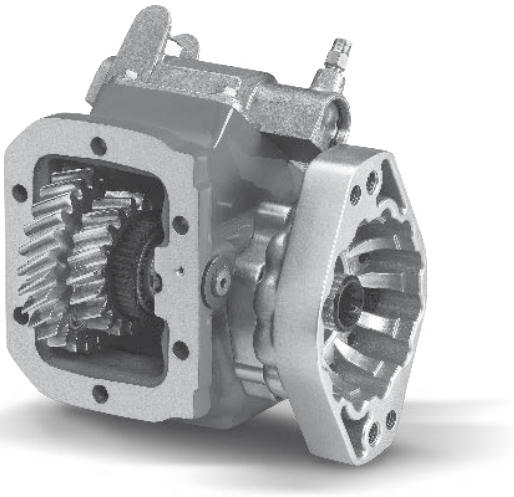

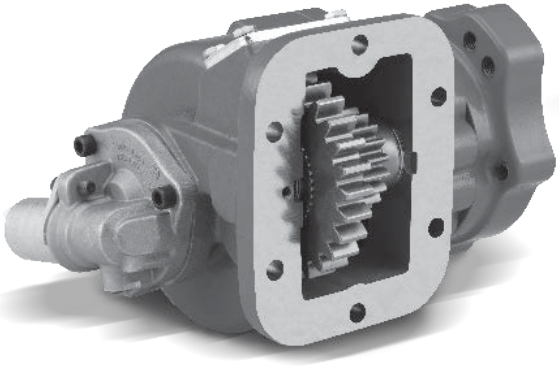

Parker Hannifin Corporation
Chelsea Products Division
Olive Branch, MS 38654 USA

Overview (MY2010 & Prior)

PTO Operation

The 3500/4500/5500 Dodge Chassis Cab vehicle, when equipped with either the automatic AISIN 6 speed or manual G-56 6 speed transmissions, will allow for an aftermarket upfit with a transmission driven PTO (Power Take-Off). The customer will have the ability to operate the PTO in either a "stationary" or "mobile" mode. The vehicles will be factory set to the "stationary" mode. In order to select the "mobile" mode a Daimler Chrysler Dealership is required to modify the vehicles settings using their proprietary Dealer service tool.

Stationary Mode

To operate the PTO in this mode the vehicle must meet the following conditions:

- Be in "park" positions (vehicles equipped with automatic transmission)
- Up fitter provider (on/off) switch has been activated
- Parking brake applied (vehicles equipped with manual transmission)
- Vehicle must be running
- No vehicle, brake or clutch switch faults present
- PTO must be correctly installed using the vehicle provided circuits

The customer has the choice to operate the PTO by utilizing the cruise control switches or by utilizing a remote control (provided by the PTO supplier). To operate the feature using the cruise control switches the customer must first activate the up fitter provided on/off switch. Next, the cruise control "on" switch is selected. Following this step the "set" switch must be depressed. The vehicle is now in the PTO mode and is ready for use. In order to increase or decrease the engine idle speed, to optimize the PTO function, the "accel" and "decel" cruise switches can be used respectively. To disengage PTO operation and return to "standard vehicle operation" simply turn the up fitter provided on/off switch to the off position.

To operate the PTO via a remote switch the customer must make sure the above conditions are met. It is vital for proper operation that the PTO and remote have been installed correctly paying special attention to ensure the vehicle provided wiring has been connected properly. This is the responsibility of the installer of the PTO and switches/remote system. It is the responsibility of the PTO manufacturer to ensure that their electrical (switches and remote) system is compatible with the vehicle's electrical architecture and software functionality.

Mobile Mode

To operate the PTO in this mode the vehicle must meet the following conditions:

- Dealer selected "mobile" mode activated via Dealer proprietary service tool
- Up fitter provider (on/off) switch has been activated
- Vehicle must be in "park" or "drive" position (vehicles equipped with automatic transmission)
- Parking brake must not be applied
- No vehicle, brake or clutch switch faults present
- Vehicle must be running
- PTO must be correctly installed using the vehicle provided circuits

The customer may choose to use the PTO while the vehicle is moving. To do so the PTO function must be activated prior to taking the vehicle out of "park". This is accomplished by activating the up fitter provided PTO on/off switch. At this point the customer may place the vehicle in a forward or reverse gear and have PTO operation. To disengage PTO operation and return to "standard vehicle operation" simply turn the up fitter provided on/off switch to the off position.

NOTE: For application specific information with respect to PTO and pump requirements and additional vehicle information (wiring schematics, preset idle values, engine speed limits, and vehicle hardware and software requirements) please refer to the Dodge Body Builders Guide by accessing "Wiring Diagrams" and choosing the appropriate links.

Overview (MY2011 & MY2012)

PTO Operation

The 3500/4500/5500 RAM Chassis Cab vehicle, when equipped with either the automatic AISIN 6-speed or manual G-56 6-speed transmissions, will allow for an aftermarket upfit with a transmission driven PTO (Power Take-Off). The customer will have the ability to operate the PTO in either a "stationary" or "mobile" mode. The vehicles will be factory set to the "stationary" mode. In order to select the "mobile" mode a Chrysler Group LLC Dealership is required to modify the vehicles settings using their proprietary Dealer service tool. Under normal operation the vehicle will go to a 900 rpm when PTO is engaged. By utilizing the cruise switches the idle speed can then be adjusted to between 900 and 2000 rpms.

Stationary Mode

This feature interacts with the transmission to utilize an auxiliary shaft to drive equipment. Activated by a switch inside the cab, this feature operates only when the vehicle is stationary. The input is switched to ground. Once active, the engine speed increased by holding the RES ACCEL button on the steering wheel or decreased by holding the COAST button. Stationary PTO is available only when the vehicle is stationary. When the truck is equipped with an automatic transmission, it must be in Park and the service brake must be released and functional. When the truck is equipped with a manual transmission, the Parking Brake must be Set and the service brake must be released and functional.

To operate the PTO in this mode the vehicle must meet the following conditions:

- Be in "park" position (vehicles equipped with automatic transmission)
- Upfitter provider (on/off) switch has been activated
- Parking brake applied (vehicles equipped with manual transmission)
- Clutch not depressed (clutch interlock switch)
- Vehicle must be running
- No transmission, engine, accelerator, brake or clutch switch faults present
- PTO must be correctly installed using the vehicle provided circuits

The customer has the choice to operate the PTO by utilizing the cruise control switches or by utilizing a remote control (provided by the PTO supplier). To operate the feature using the cruise control switches the customer must first activate the up fitter provided on/off switch. The vehicle is now in the PTO mode and is ready for use. In order to increase or decrease the engine idle speed, to optimize the PTO function, the "accel" and "decel" cruise switches can be used respectively. To disengage PTO operation and return to "standard vehicle operation" simply turn the up fitter provided on/off switch to the off position.

To operate the PTO via a remote switch the customer must make sure the above conditions are met. It is vital for proper operation that the PTO and remote have been installed correctly paying special attention to ensure the vehicle provided wiring has been connected properly. This is the responsibility of the installer of the PTO and switches/remote system. It is the responsibility of the PTO manufacturer to ensure that their electrical (switches and remote) system is compatible with the vehicle's electrical architecture and software functionality.

Overview (MY2011 & MY2012) (Continued)

Mobile Mode

This feature interacts with the transmission auxiliary shaft. The feature is activated by a switch (closed to ground) in the cab after selected by a service tool. When active, this feature limits engine speed and road speed to calibrated values. When this feature is selected stationary PTO and Remote PTO features are not available.

To operate the PTO in this mode the vehicle must meet the following conditions:
- Dealer selected "mobile" mode activated via Dealer proprietary service tool
- Upfitter provider (on/off) switch has been activated
- Vehicle must be in "park" or "drive" position (vehicles equipped with automatic transmission)
- Parking brake must not be applied
- Clutch not depressed (clutch interlock switch)
- No transmission, engine, accelerator, brake or clutch switch faults present
- Vehicle must be running
- PTO must be correctly installed using the vehicle provided circuits

The customer may choose to use the PTO while the vehicle is moving. To do so the PTO function must be activated prior to taking the vehicle out of "park". This is accomplished by activating the up fitter provided PTO on/off switch. At this point the customer may place the vehicle in a forward or reverse gear and have PTO operation.
To disengage PTO operation and return to "standard vehicle operation" simply turn the up fitter provided on/off switch to the off position.

Remote Stationary mode

This feature interacts with the transmission to utilize an auxiliary shaft to drive equipment. Activated by a switch outside of the cab, this feature operates only when the vehicle is stationary. The input is switched to ground. Once active, the engine speed is changed when the switch changes from Off (open circuit) to On (closed to ground) or toggled in less than ½ second. Toggling the switch On-Off-On triggers the engine to change to the next calibrated engine speed. This can be repeated for up to five engine speed settings. Repeated toggles cycles through the engine speed 1-2-3-4-5-1-2 and so on. Remote PTO can be calibrated for one to five selectable engine speeds. The engine speeds are also calibrated. Remote PTO feature has a higher priority than Idle Up. If the Remote PTO feature is active the Idle Up switches are ineffective. The Idle Up or Stationary PTO feature cannot be activated until the Remote PTO relinquishes control.

To operate the PTO in this mode the vehicle must meet the following conditions:
- Be in "park" position (vehicles equipped with automatic transmission)
- Upfitter provider (on/off) switch has been activated
- Parking brake applied (vehicles equipped with manual transmission)
- Clutch not depressed (clutch interlock switch)
- Vehicle must be running
- No transmission, engine, accelerator, brake or clutch switch faults present
- PTO must be correctly installed using the vehicle provided circuits

NOTE: For application specific information with respect to PTO and pump requirements and additional vehicle information (wiring schematics, preset idle values, engine speed limits, and vehicle hardware/ software requirements) please refer to the current RAM Body Builder's Guide "PTO Operation & Installation Guide".

Overview (MY2013 & Later)

PTO Operation

The 3500/4500/5500 RAM Chassis Cab vehicle, when equipped with either the automatic AISIN 6-speed or manual G-56 6-speed transmissions (manual transmission option MY2013 thru MY2018 only), will allow for an aftermarket upfit with a transmission driven PTO (Power Take-Off). The customer will have the ability to operate the PTO in either a "stationary" or "mobile" mode. Under normal operation the vehicle will go to a 900 RPM when PTO is engaged. By utilizing the cruise switches the idle speed can then be adjusted to between 900 and 2000 RPMs.

Stationary Mode

This feature interacts with the transmission to utilize an auxiliary PTO to drive equipment. Activated by a switch inside the cab, this feature operates only when the vehicle is stationary.

Once active, the engine speed may be increased by holding the RES ACCEL button on the steering wheel or decreased by holding the COAST button.

This is the factory programmed setting. If you need a single set speed, you will now be able to program it (and disable the cruise switches) via the Electronic Vehicle Information Center (EVIC) screen in the center of the cluster.

Stationary PTO is available only when the vehicle is stationary. When the truck is equipped with an automatic transmission, it must be in Park and the service brake must be released and functional. When the truck is equipped with a manual transmission (not available MY2019+), the parking brake must be set and the service brake must be released and functional.

To operate the PTO in this mode the vehicle must meet the following conditions:

- Be in park position (vehicles equipped with automatic transmission)
- PTO switch has been activated
- Parking brake applied (vehicles equipped with manual transmission, MY2013 thru MY2018)
- Clutch not depressed (clutch interlock switch, vehicles equipped with manual transmission, MY2013 thru MY2018)
- Vehicle must be running
- No transmission, engine, accelerator, brake or clutch switch faults present
- PTO must be correctly installed using the vehicle provided circuits

To operate the PTO via a remote switch the customer must make sure the above conditions are met. It is vital for proper operation that the PTO and remote have been installed correctly paying special attention to ensure the vehicle provided wiring has been connected properly. This is the responsibility of the installer of the PTO and switches/remote system. It is the responsibility of the PTO manufacturer to ensure that their electrical (switches and remote) system is compatible with the vehicle's electrical architecture and software functionality.

Overview (MY2013 & Later) (Continued)

Mobile Mode

Mobile mode allows for use of the PTO when the vehicle is in motion. This feature, when activated by the menu available on the Electronic Vehicle Information Center (EVIC) screen in the center of the cluster, will allow you to enter mobile PTO mode when you press the PTO switch on the dash. When this feature is selected stationary PTO and Remote PTO features are not available.

To operate the PTO in this mode the vehicle must meet the following conditions:

- PTO switch has been activated
- Vehicle must be in park position (vehicles equipped with automatic transmission)
- Parking brake must not be applied
- Clutch not depressed (clutch interlock switch, vehicles equipped with manual transmission, MY2013 thru MY2018)
- No transmission, engine, accelerator, brake or clutch switch faults present
- Vehicle must be running
- PTO must be correctly installed using the vehicle provided circuits

The customer may choose to use the PTO while the vehicle is moving. To do so the PTO function must be activated prior to taking the vehicle out of park. This is accomplished by activating the PTO on/off switch. At this point the customer may place the vehicle in a forward or reverse gear and have PTO operation.

The PTO will also function in park and neutral but without an increase in idle speed. However, the accelerator pedal can be used to increase PTO speed. Mobile mode does not provide the exact same capability as a 'live drive' i.e. you cannot have PTO capability at zero vehicle speed in drive. However, some customers have had success with shifting the vehicle into neutral and allowing the vehicle to coast.

To disengage PTO operation and return to standard vehicle operation simply turn the up fitter provided on/off switch to the off position.

Remote Mode Features

Remote mode allows the use of an aftermarket auxiliary switch to actuate the PTO. Presumably this will be from a location other than the cab of the truck, or some automated/relay driven method to turn on the PTO is required.

Remote PTO can be calibrated for one to three selectable engine speeds.

Remote mode also is the only method that accommodates multiple PTO speeds. Up to three different PTO speeds can be programmed. These speeds are programmed via the Electronic Vehicle Information Center (EVIC) screen in the center of the cluster. The circuits that enable these multiple speeds are contained in the Vehicle System Interface Module (VSIM). The VSIM module is located under the dash on the driver's side. The connecting wires are contained in the upfitter wiring kit and VSIM wiring kit.

Overview (MY2013 & Later) (Continued)

Remote PTO feature has a higher priority than Idle Up. If the Remote PTO feature is active the Idle Up switches are ineffective. The Idle Up or Stationary PTO feature cannot be activated until the Remote PTO relinquishes control.

To operate the PTO in this mode the vehicle must meet the following conditions:

- Be in park position (vehicles equipped with automatic transmission)
- Upfitter provided (on/off) switch has been activated
- Parking brake applied if feature is enabled (vehicles equipped with manual transmission)
- Clutch not depressed (clutch interlock switch, vehicles equipped with manual transmission, MY2013 thru MY2018)
- Vehicle must be running
- No transmission, engine, accelerator, brake or clutch (manual transmission) switch faults present
- PTO must be correctly installed using the vehicle provided circuits

NOTE: For application specific information with respect to PTO and pump requirements and additional vehicle information (wiring schematics, preset idle values, engine speed limits, and vehicle hardware/software requirements) please refer to the current RAM Body Builder's Guide PTO Operation & Installation Guide.

Pre Installation Overview

The current Power Take-Off (PTO) installation is from under the vehicle, an alternative method for Dodge has been developed with the help of Chelsea Products that allows the installation from above by removing the PTO patch panel in the floor.

The installation instructions below are shown using a Dodge 4500 crew cab for installation, but applies to all Dodge work trucks. See Dodge upfitter web site for any changes to this installation information.

Fig. 28

1. Unbolt the seat and move it to the rear of the cabin. (**Fig. 28**)

Fig. 29

2. Remove the sill guards (rocker panel covers) passenger side to allow the floor mat to be lifted. They are removed by prying straight up to disengage metal clips. (**Fig. 29**)

Fig. 30

3. Lift the floor mat and fold it rearward and towards the driver side to expose the patch panel (**Fig. 30**)

4. Remove the fasteners and sealer from around the patch panel. Cut away the sound deadener pad to expose the transmission PTO access. (**Fig. 31**)

Fig. 31

5. See installation of the PTO for complete PTO installation instructions on page 7-10 of this manual.

6. To assemble, reverse the above procedure (1-4) using RTV to reseal the PTO floor pan patch panel.

Parker Hannifin Corporation
Chelsea Products Division
Olive Branch, MS 38654 USA

Pre Installation Overview (Continued)

Under Vehicle Installation

1. To access the PTO aperture on the right (passenger) side of the transmission, the exhaust pipe will need to be removed. (**Fig. 32**)

2. To make this process easier the following information is provided.

   The front end of the exhaust pipe at the turbo charger is secured with a V band clamp part number 52121895AB. It is tightened to a torque value of 150 inch pounds.

   At the rear of the pipe the M10 x 1.5 nuts are torqued to 43 lbs-ft.

   The part number for the gasket that is located between the front pipe and the catalytic converter/ particulate filter (if it is damaged or lost) is 52122213AB.

   More specific instructions on removing and installing the exhaust pipe are available in the Dodge Truck service manual.

   If there are any additional questions related to this procedure please contact the Dodge Truck Body Builder Hotline at (866) 205-4102 or dodgebbg@dcx.com.

3. Install Power Take-Off as described on pages 7-10 of this manual.

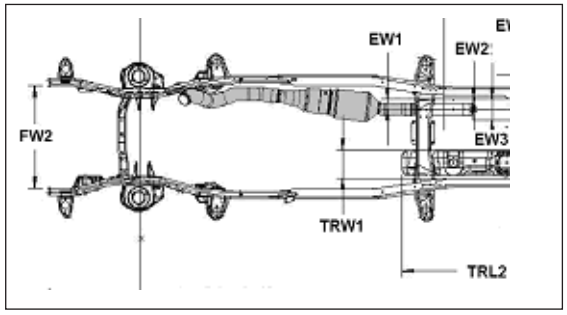

Fig. 32

Parker Hannifin Corporation
Chelsea Products Division
Olive Branch, MS 38654 USA

Heavy Duty Chassis Cab PTO Installation

1. Before mounting the PTO remove the high pressure port plug located on the left side (drivers side of transmission) and install part number 379749 male connector fitting into port. Also install the 90° swivel nut (part number 379703) onto the male connector (379749) See **Fig. 33** chart for correct installation drawing.

Model Year	Installation Sketch's	Page
MY2010 and prior	SK-455	31
MY2011 and MY2012	SK-495	33
MY2013 and later	SK-567	34

Fig. 33

2. Next remove the low pressure port plug located on the right side (passenger side of transmission) and install part number 379479 male connector fitting into port. (**Fig. 34**)

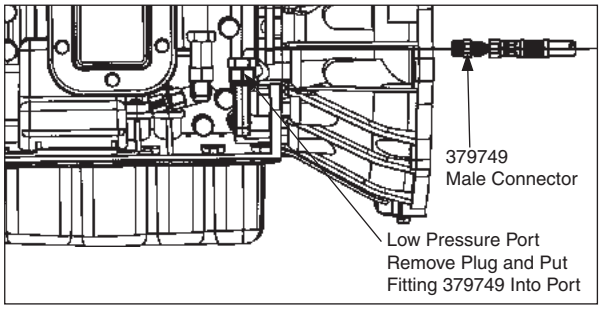

Fig. 34

3. One recommendation for installation of the PTO. Remote Solenoid Valve is to locate it at the bottom forward area of the transmission housing. (**Fig. 35**)

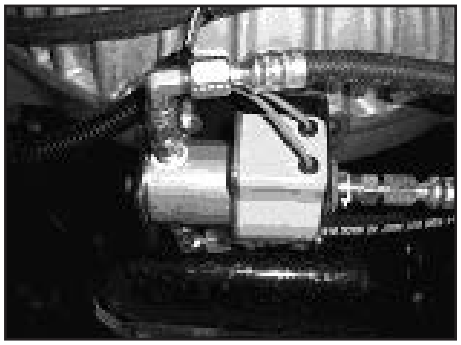

Fig. 35

4. Install the proper studs (379428-14 furnished with PTO) in the PTO aperture pad. The stud kit furnished with the PTO contains five (5) studs and one (1) cap screw and have pre-applied locking/ sealing compound. Do not install a stud in the top hole on the aperture pad, this is for the cap screw (See **Fig. 36**) for proper placement of studs. Tighten studs securely and torque to 17-19 Lbs-ft (23.05-25.76 Nm).

CAUTION: Over tightening of studs may damage stud and/or transmission threads.

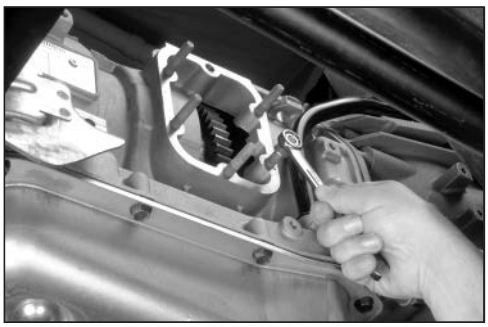

Fig. 36

This symbol warns of possible personal injury.

Parker Hannifin Corporation
Chelsea Products Division
Olive Branch, MS 38654 USA

Heavy Duty Chassis Cab PTO Installation (Continued)

5. Place the gasket (35-P-41) provided with the PTO over the studs (**Fig. 37**). Only one gasket is required because the 252 Series PTO does not require the backlash to be set.

Fig. 37

6. Secure the PTO & Pump to the transmission. Install the long bolt to the top hole in the PTO and the flange nuts (provided with the PTO) to the studs (**Fig. 38**).

NOTE: Flange nuts do not require lock washers.

Fig. 38

7. Fasten the Power Take-Off to the transmission. Torque the five (5) flange nuts (379744) to 35-40 Lbs-ft [47-54 Nm].

   Torque the cap screw (379578-48) to 30-35 Lbs-ft [41-47 Nm].

8. Refer to "Installation Instructions" pages 7-10 of the owner's manual for proper 270 Series PTO mounting.

9. After PTO has been mounted connect hoses as shown for the chassis/transmission model year. See SK-455, 495 or 567.

10. Install PTO wiring harness per the installation instructions. Use year appropriate wiring (See pages 30-36).

NOTE: After proper installation, when PTO is engaged, if there is an objectionable noise from the PTO, the backlash may need to be altered to reduce the noise on Aisin transmissions.

RAM Cab/Chassis MY2011 & Later Wiring Reference

Glove Compartment

1. Separate Upfitter Jumper kit RAM P/N 68049501 AB found in glove compartment:
   - Wiring harnesses with plastic connectors are to be used in the cab
   - Eight 12-gauge wires with pins connected are to be utilized for wiring near Auxiliary Control Box (Aux Box) in engine compartment (**Fig. 39**)
   - Eight 20-gauge wires with pins connected are to be utilized for wiring into Transmission Connector Upfitter located near transmission (not used for basic PTO install)

2. Of the eight 12-gauge wires with pins connected, separate the following four loose wires (**Fig. 40**):
   - K427 (Orange w/Light Green Stripe) Function = Aux_PTO_Control
   - F928 (Pink w/Yellow Stripe) Function = Aux_PTO_Power Output
   - Z907 (Black) Function = Ground
   - G425 (Violet w/Yellow Stripe) Function = Indicator

Fig. 39

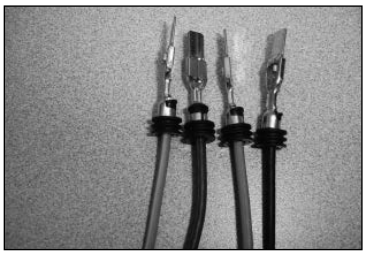
Fig. 40

Engine Compartment Reference

3. Location of K427 Wire (**Fig. 41**)

4. Light Gray 4 PIN Connector (**Fig. 42**)

5. Light Gray 4 PIN connector connection references (**Fig. 43**)

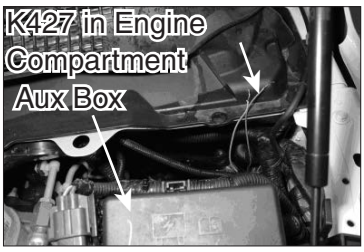

Fig. 41

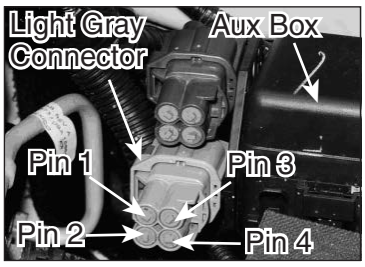

Fig. 42

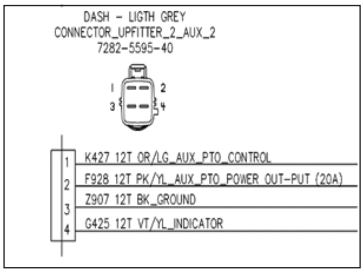

Fig. 43

Under Dash in Cab Reference

6. There are two open connectors underneath the dash, located on the driver's side by the parking brake that will be used for basic PTO wiring installation. One 6-pin White connector and one 6-pin Light Gray connector (**Fig. 44**).

7. The White connector will attach to the wiring harness with the 6-pin black connector found in the glove compartment as part of the Upfitter Jumper kit RAM P/N 68049501 AB

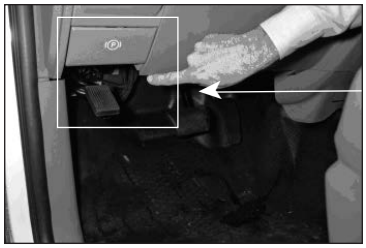
Fig. 44

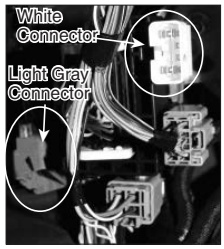

Parker Hannifin Corporation
Chelsea Products Division
Olive Branch, MS 38654 USA

Dodge/AISIN MY2007-MY2010 (AS68RC) Transmission
Shift Option D
252 Series

(SK-455 Rev B)

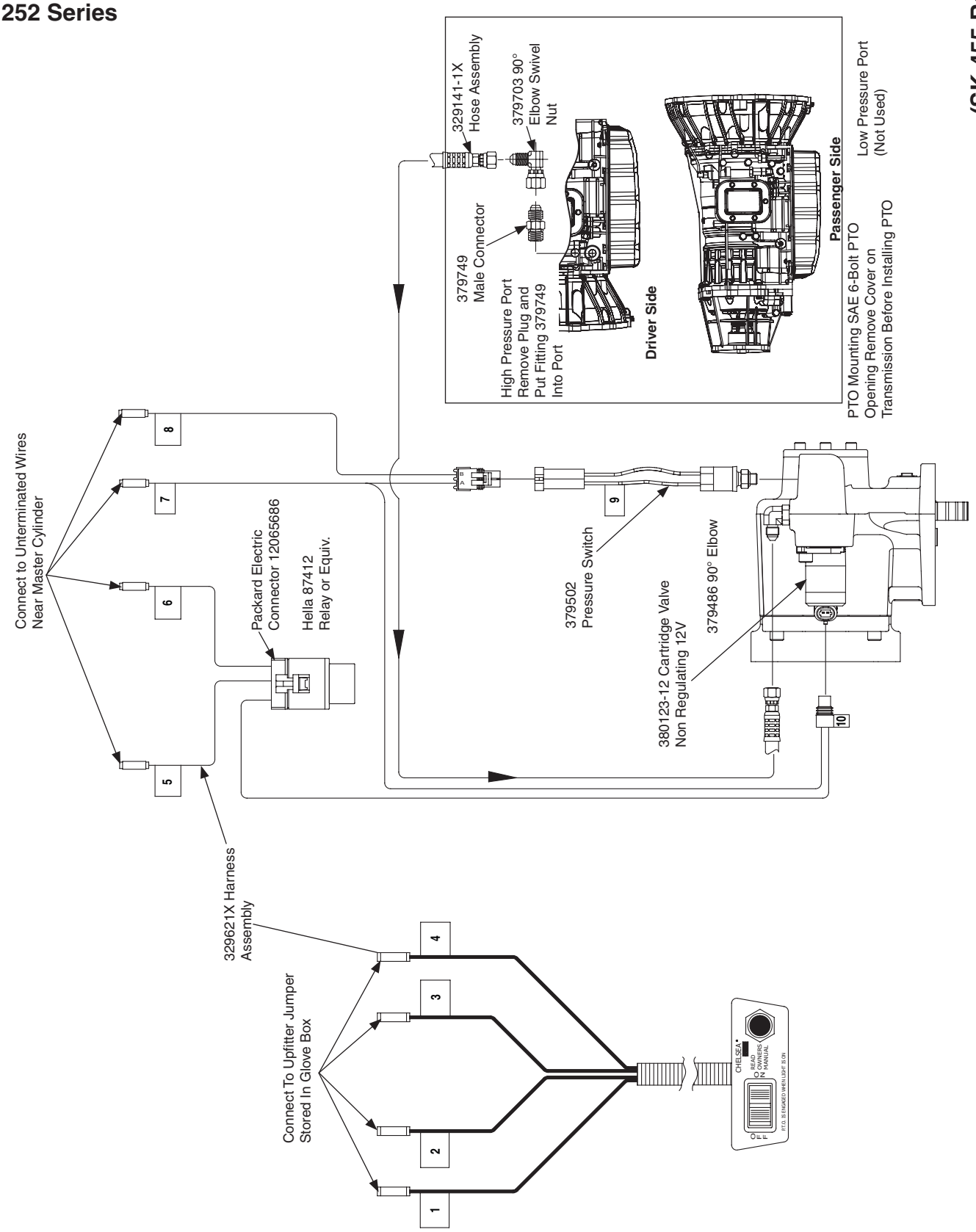

Parker Hannifin Corporation
Chelsea Products Division
Olive Branch, MS 38654 USA

Dodge/Sterling Chassis Cab
6.7L w/AISIN (AS68RC)Transmission
Wiring Chart - 252D Series PTO

(SK-455 Rev B)

MY2007 Wiring Chart Reference

	Chelsea Wire	Connected to Dodge Wire	Location
1	Orange	*K425 Orange w/Brown Stripe	Terminal #9, 10-way Connector on Bellhousing
2	Violet 1	*V937 Violet w/Brown Stripe	Terminal #8, 10-way Connector on Bellhousing
3	Violet 2	G425 Violet w/Yellow Stripe	Upfitter Jumper Connector**
4	Pink	F922 Pink w/Red Stripe	Upfitter Jumper Connector**
5	Orange	K427 Orange w/Lt. Green Stripe	Unterminated Wires Near Master Cylinder
6	Pink	F922C Pink w/Red Stripe	Unterminated Wires Near Master Cylinder
7	Black	Z914 Black	Unterminated Wires Near Master Cylinder
8	Violet	G425 Violet w/Yellow Stripe	Unterminated Wires Near Master Cylinder
	Chelsea Wire	**Connected to**	**Location**
9	Male Gray Connector w/Green seal	Pressure Switch	PTO
10	Male Gray Connector w/Blue seal	PTO Solenoid	PTO

*** NOTE:** These two wires must be cut from Dodge 10 way connector. Do not cut any other wires.
**** NOTE:** Stored in Vehicle Glove Box. Connect to Mating Plug under Instrument Panel Near Grommet.

MY2008 - MY2010 Wiring Chart Reference

	Chelsea Wire	Connected to Dodge Wire	Location
1	Orange	K425 Pink w/Yellow Stripe	Upfitter Jumper Connector
2	Violet 1	V937 Violet w/Brown Stripe	Upfitter Jumper Connector
3	Violet 2	G425 Violet w/Yellow Stripe	Upfitter Jumper Connector
4	Pink	F922 Pink w/Red Stripe	Upfitter Jumper Connector
5	Orange	K427 Orange w/Lt. Green Stripe	Unterminated Wires Near Master Cylinder
6	Pink	F922C Pink w/Red Stripe	Unterminated Wires Near Master Cylinder
7	Black	Z914 Black	Unterminated Wires Near Master Cylinder
8	Violet	G425 Violet w/Yellow Stripe	Unterminated Wires Near Master Cylinder
	Chelsea Wire	**Connected to**	**Location**
9	Male Gray Connector w/Green seal	Pressure Switch	PTO
10	Male Gray Connector w/Blue seal	PTO Solenoid	PTO

NOTE: Wire Numbers on the Chelsea Wiring Chart are for Reference to Model Year Wiring.
NOTE: Upfitter Connector is shipped loose with vehicle and is stored behind seat.

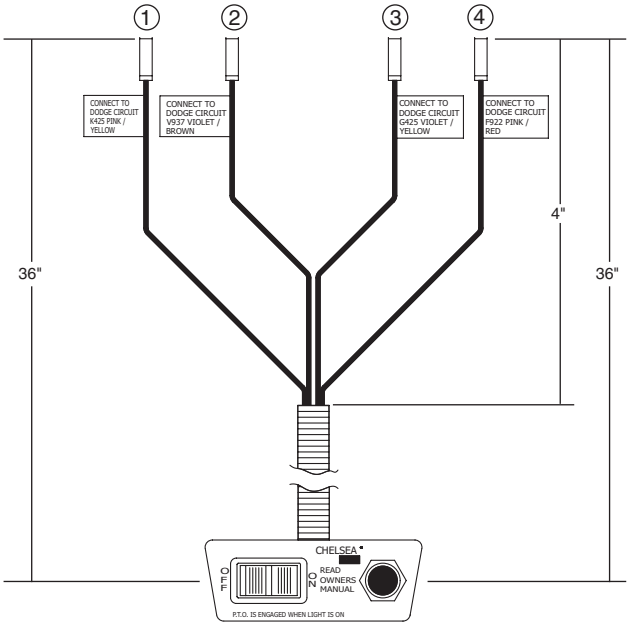

Parker Hannifin Corporation
Chelsea Products Division
Olive Branch, MS 38654 USA

AISIN (AS69RC/AS66RC) MY2011 & Later Transmission w/o EOC
Shift Option R
252 Series

(SK-495)

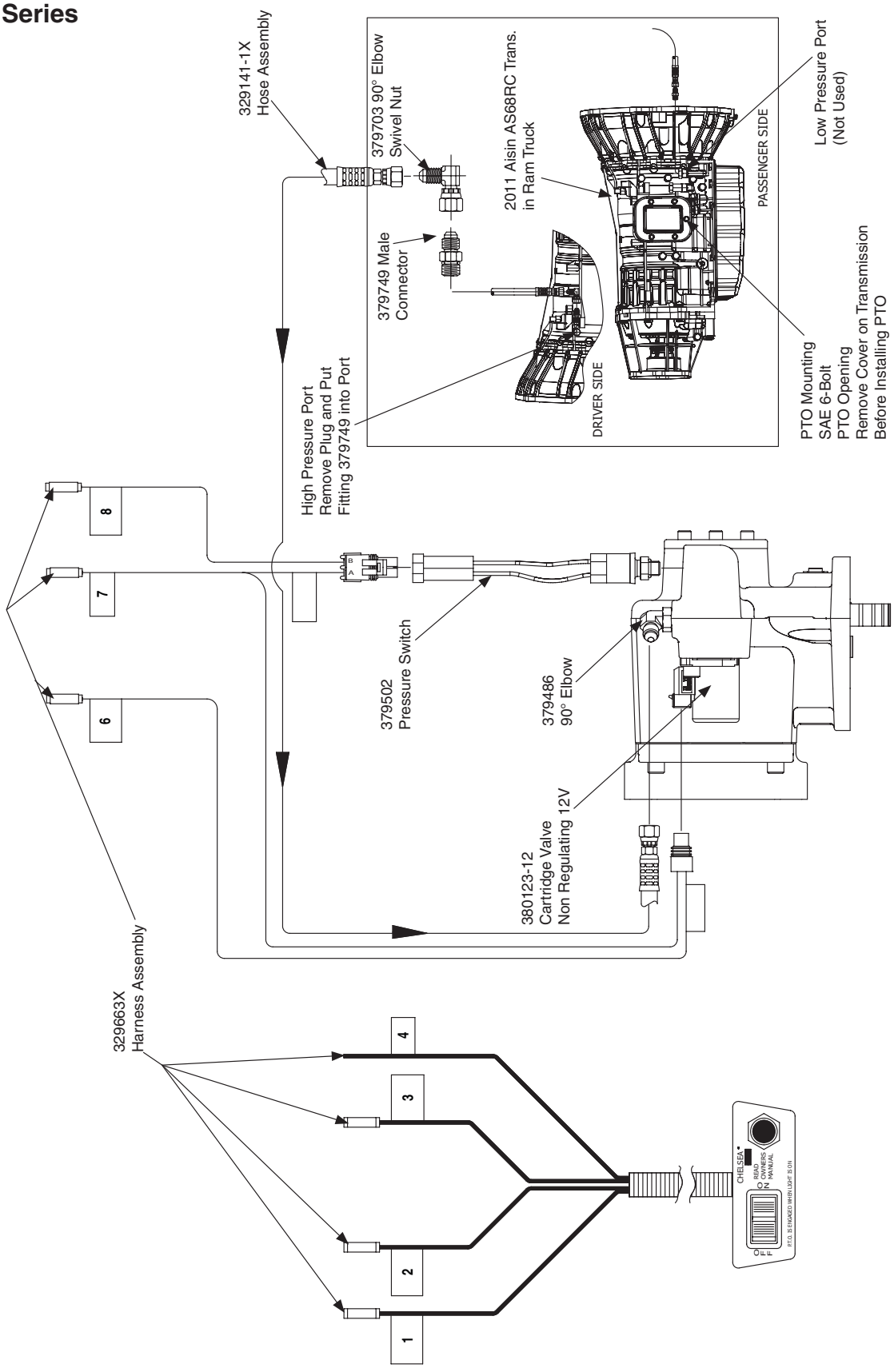

Parker Hannifin Corporation
Chelsea Products Division
Olive Branch, MS 38654 USA

RAM/AISIN (AS69RC) MY2013 & Later Transmission w/o EOC
Shift Option R
252 Series

(SK-567)

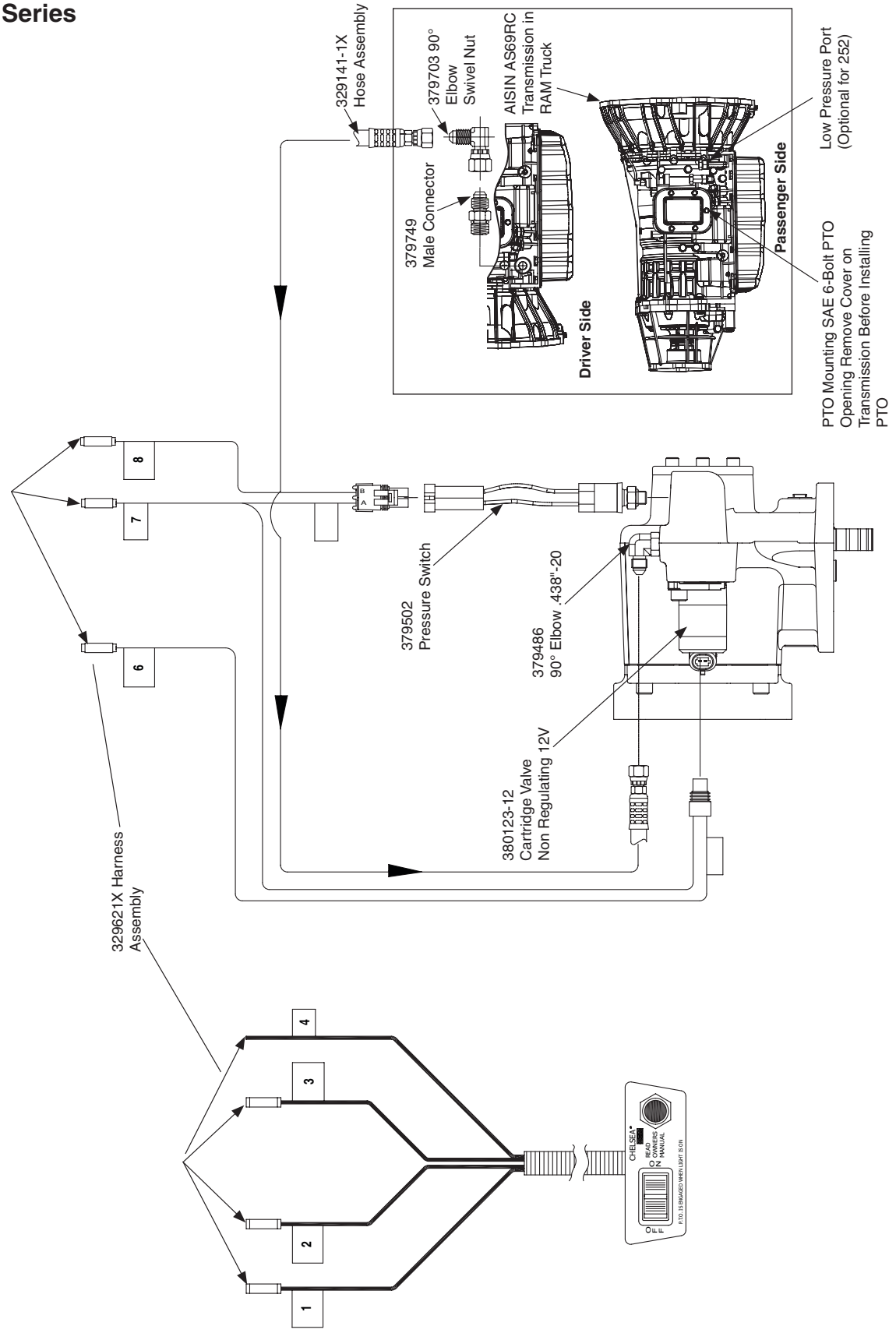

Parker Hannifin Corporation
Chelsea Products Division
Olive Branch, MS 38654 USA

Wiring Chart MY2011 and Later Dodge and RAM Chassis Cab 6.7L Diesel w/AISIN Transmission - 252 R Series (SK-495 & SK-567)

	Wire #	Chelsea Wire		RAM Loose Wire Harness		RAM Connector		RAM Circuit	
		* 2011-2012	** 2013+	* 2011-2012	** 2013+	* 2011-2012	** 2013+	* 2011-2012	** 2013+
UNDER DASH CHELSEA SWITCH	1	Orange Wire from PTO Activation Switch		Orange/Brown Wire on Black Connector in Upfitter Harness	Pink Wire on Black Connector in Upfitter Harness	6 Pin Off-White/Natural Connector Found Near Parking Brake	6 Pin Off-White/ Natural Connector Found Behind VISM Module	K425 - Signal Wire to Diesel ECM Orange/ Brown	F425 - Remote PTO Switch to Diesel ECM Pink
	2	Violet Wire from PTO Activation Switch		Violet/Brown Wire on Black Connector in Upfitter Harness	Black Wire on Black Connector in Upfitter Harness			V937 - Signal Wire to Diesel ECM Violet/ Brown	Z905 - Ground Black
	3	Yellow Wire from PTO Indicator Lamp		Violet/Yellow Wire on Gray Connector in Upfitter Harness		6 Pin Gray Connector Found Near Parking Brake	6 Pin Gray Connector Found Behind VISM Module (**NOTE 1**)	G425 - PTO Indicator Signal from Pressure Switch Violet/Yellow	G425 - PTO Indicator Signal from Pressure Switch Violet/Yellow (**NOTE 1**)
	4	Red Wire from PTO Indicator Lamp		Splice to Pink/Yellow Loop in Gray Connector Upfitter Harness	Splice to Pink/Or- ange Loop in Gray Connector Upfitter Harness		6 Pin Gray Connector Found Behind VISM Module	F922 - 12V Ignition Power Source Pink/Yellow	F606 - 12V Ignition Power Source Pink/Orange
	RAM Wire	Not Applicable (Ram Wiring)		Ram Orange/ Green Wire Behind Fuse Box (PTO Installer to Complete)	Pre-Wired when PTO Option Ordered	Light Gray 4-Pin Connector/Pin 1 - Top/Left	Pre-Wired when PTO Option Ordered	K427 - Sig- nal Wire from TCM to Relay for PTO Power	Pre-Wired when PTO Option Ordered
UNDER HOOD	6	Red Wire - Power to PTO Solenoid		Connect to Wire/Weather Seal - Pink/Yellow		Light Gray 4-Pin Connector/Pin 2 Bottom/Left		F928- AUX_ PTO_OUT- PUT Pink/ Yellow	F605- AUX_ PTO_OUTPUT Pink/Violet
	7	Black Wire Ground Wire from PTO Solenoid and Pressure Indicator Switch		Connect to Wire/Weather Seal - Black		Light Gray 4-Pin Connector/Pin 3 - Top/ Right		Z907 - Ground Black	Z907 - Ground Black/Brown
	8	Violet Wire Pressure Indicator Signal from Pressure Switch		Connect to Wire/Weather Seal- Violet/Yellow		Light Gray 4-Pin Connector/Pin 4 - Bottom/ Right		G425 - PTO Indicator Violet/Yellow	

See Next Page for **NOTES**

* For Model Year 2011/12 refer to SK-495

** For Model Year 2013 and Later refer to SK-567

Refer to RAM Body Builder Web Site for changes and/or updates to wiring information

Parker Hannifin Corporation
Chelsea Products Division
Olive Branch, MS 38654 USA

Wiring Chart MY2011 and Later Dodge and RAM Chassis Cab 6.7L Diesel w/AISIN Transmission - 252 R Series (Continued) (SK-495 & SK-567)

NOTE 1: For MY2011 thru MY2018, the ground signal from the pressure switch must be connected to the VSIM - Circuit W708. If there is no signal from the pressure switch within 30 seconds from when the PTO solenoid is given power, the RAM system will turn the PTO off.

The VSIM is located near the parking brake and has four connections for four different wiring harnesses to interface with. The W708 Circuit utilizes the Brown RAM upfitter harness supplied with the truck. The W708 is cavity #8 and is an Orange/Brown wire. The order code for VSIM is XXS.

An upfitter supplied wire must be used to join the G425 (Violet/Yellow) Circuit to the W708 (Orange/Brown) Circuit in the Brown VSIM harness. Do not cut the G425 wires.

NOTE 2: For MY2019+, the VSIM is located under the steering column and has four connections for four different wiring harnesses to interface with. An upfitter supplied wire must be used to join the G425 (Violet/Yellow) Circuit to the W708 (Orange/Brown) Circuit in the Brown VSIM harness. Do not cut the G425 wires.

NOTE 3: When installing the PTO wiring using RAM's remote mode, the default engine speed once the PTO is engaged is 900 engine RPM. In order to operate the truck at higher speeds, the electronic vehicle information center (EVIC) must be programmed for up to (3) additional speeds. See RAM's body builder guide for details related to the programming of the various speeds as well as what circuits need to be grounded to actuate the multi speed function.

NOTE 4: For MY2013, the RAM cab chassis is equipped with a OEM supplied PTO switch in the center dash. This switch is not supplied with MY2019+. This OEM switch allows for the engine speed to be adjusted using the cruise control buttons during PTO operation. Also, a single set speed can be programmed to operate the PTO at a higher speed than the default of 900 engine RPM. This is the only setup for adjusting the engine speed during PTO operation using the cruise controls. See the RAM body builder guide for additional instructions and guidelines.

As with all PTO installations, a PTO engagement warning light must be utilized and be clearly visible to the operator. When utilizing the RAM supplied switch the warning light is in the switch itself. It will blink when activated and become solid once a signal is received from the PTO pressure switch. The pressure indicator signal must be wired to RAM W708 Circuit in the truck's VSIM for the system to properly operate the PTO. For completion of the pressure indicator signal, a minimum of 14 wire is to be used.

Per Chelsea's Owners Manual, all PTO warning labels and safety devices must be utilized. Failure to do so puts the operator at risk which would be the responsibility of the PTO installer.

NOTE 5: Trucks coming from the factory are shipped in ship mode. In order to cancel ship mode, a RAM dealer must flash the cancellation command.

Due to the normal and sometime severe torsional vibrations that Power-Take-Off units experience, operators should follow a set maintenance schedule for inspections. Failure to service loose bolts or Power-Take-Off leaks could result in potential auxiliary Power-Take-Off or transmission damage.

Periodic PTO MAINTENANCE is required by the owner/operator to ensure proper, safe and trouble free operation.

Daily: Check all air, hydraulic and working mechanisms before operating PTO Perform maintenance as required.

Monthly: Inspect for possible leaks and tighten all air, hydraulic and mounting hardware, if necessary. Torque all bolts, nuts, etc. to Chelsea specifications. Insure that splines are properly lubricated, if applicable. Perform maintenance as required.

With regards to the direct mounted pump splines, the PTO requires the application of a specially formulated anti-fretting, high pressure, high temperature grease. The addition of the grease has been proven to reduce the effects of the torsional vibrations, which result in fretting corrosion on the PTO internal splines as well as the pump external splines. Fretting corrosion appears as a "rusting and wearing" of the pump shaft splines. Severe duty applications, which require long PTO running times and high torque may require more frequent regreasing. Applications such as Utility Trucks that run continuously and are lightly loaded also require frequent regreasing due to the sheer hours of running time. It is important to note that service intervals will vary for each and every application and is the responsibility of the end user of the product. Chelsea also recommends that you consult your pump owners manuals and technical services for their maintenance guidelines. Fretting corrosion is caused by many factors and without proper maintenance; the anti-fretting grease can only reduce its effects on components.

Chelsea offers the grease to our customers in two packages. The first is a 5/8 fluid ounce tube (379688), which is included with every applicable PTO, and the second is a 14-ounce grease cartridge (379831). Chelsea also offers greaseable shafts for select output designators.

Warranty: Failure to comply entirely with the provisions set forth in the appropriate Owner's Manual will result in voiding of ALL Warranty consideration.

Parker Hannifin Corporation
Chelsea Products Division
Olive Branch, MS 38654 USA

Notes

Parker Hannifin Corporation
Chelsea Products Division
Olive Branch, MS 38654 USA

Offer of Sale

WARNING: This product can expose you to chemicals including Lead and Lead Compounds, and Di(2-ethylhexyl)phthalate (DEHP) which are known to the State of California to cause cancer and birth defects or other reproductive harm. For more information go to www.P65Warnings.ca.gov

The items described in this document and other documents and descriptions provided by Parker Hannifin Corporation, its subsidiaries and its authorized distributors ("Seller") are hereby offered for sale at prices to be established by Seller. This offer and its acceptance by any customer ("Buyer") shall be governed by all of the following Terms and Conditions. Buyer's order for any item described in its document, when communicated to Seller verbally, or in writing, shall constitute acceptance of this offer. All goods, services or work described will be referred to as "Products".

1. Terms and Conditions. Seller's willingness to offer Products, or accept an order for Products, to or from Buyer is subject to these Terms and Conditions or any newer version of the terms and conditions found on-line at www.parker.com/saleterms/. Seller objects to any contrary or additional terms or conditions of Buyer's order or any other document issued by Buyer.

2. Price Adjustments; Payments. Prices stated on Seller's quote or other documentation offered by Seller are valid for 30 days, and do not include any sales, use, or other taxes unless specifically stated. Unless otherwise specified by Seller, all prices are F.C.A. Seller's facility (INCOTERMS 2010). Payment is subject to credit approval and is due 30 days from the date of invoice or such other term as required by Seller's Credit Department, after which Buyer shall pay interest on any unpaid invoices at the rate of 1.5% per month or the maximum allowable rate under applicable law.

3. Delivery Dates; Title and Risk; Shipment. All delivery dates are approximate and Seller shall not be responsible for any damages resulting from any delay. Regardless of the manner of shipment, title to any products and risk of loss or damage shall pass to Buyer upon placement of the products with the shipment carrier at Seller's facility. Unless otherwise stated, Seller may exercise its judgment in choosing the carrier and means of delivery. No deferment of shipment at Buyers' request beyond the respective dates indicated will be made except on terms that will indemnify, defend and hold Seller harmless against all loss and additional expense. Buyer shall be responsible for any additional shipping charges incurred by Seller due to Buyer's acts or omissions.

4. Warranty. Seller warrants that all products sold, other than the 590 Series, conform to the applicable Parker Chelsea standard specification for the lesser period of 2 years (24 Months) from date of service or 2-1/2 years (30 Months) from date of build (as marked on the product name plate). Seller warrants that the 590 Series will conform to the applicable Seller standard specification for the lesser period of 2 years (24 Months) from date of service or 2000 hours of usage. The prices charged for Seller's products are based upon the exclusive limited warranty stated above, and upon the following disclaimer: **DISCLAIMER OF WARRANTY: THIS WARRANTY COMPRISES THE SOLE AND ENTIRE WARRANTY PERTAINING TO PRODUCTS PROVIDED HEREUNDER. SELLER DISCLAIMS ALL OTHER WARRANTIES, EXPRESS AND IMPLIED, INCLUDING DESIGN, MERCHANTABILITY AND FITNESS FOR A PARTICULAR PURPOSE.**

5. Claims; Commencement of Actions. Buyer shall promptly inspect all Products upon delivery. No claims for shortages will be allowed unless reported to the Seller within 10 days of delivery. No other claims against Seller will be allowed unless asserted in writing within 30 days after delivery. Buyer shall notify Seller of any alleged breach of warranty within 30 days after the date the defect is or should have been discovered by Buyer. Any action based upon breach of this agreement or upon any other claim arising out of this sale (other than an action by Seller for an amount due on any invoice) must be commenced within 12 months from the date of the breach without regard to the date breach is discovered.

6. LIMITATION OF LIABILITY. UPON NOTIFICATION, SELLER WILL, AT ITS OPTION, REPAIR OR REPLACE A DEFECTIVE PRODUCT, OR REFUND THE PURCHASE PRICE. IN NO EVENT SHALL SELLER BE LIABLE TO BUYER FOR ANY SPECIAL, INDIRECT, INCIDENTAL OR CONSEQUENTIAL DAMAGES ARISING OUT OF, OR AS THE RESULT OF, THE SALE, DELIVERY, NON-DELIVERY, SERVICING, USE OR LOSS OF USE OF THE PRODUCTS OR ANY PART THEREOF, OR FOR ANY CHARGES OR EXPENSES OF ANY NATURE INCURRED WITHOUT SELLER'S WRITTEN CONSENT, EVEN IF SELLER HAS BEEN NEGLIGENT, WHETHER IN CONTRACT, TORT OR OTHER LEGAL THEORY. IN NO EVENT SHALL SELLER'S LIABILITY UNDER ANY CLAIM MADE BY BUYER EXCEED THE PURCHASE PRICE OF THE PRODUCTS.

7. User Responsibility. The user, through its own analysis and testing, is solely responsible for making the final selection of the system and Product and assuring that all performance, endurance, maintenance, safety and warning requirements of the application are met. The user must analyze all aspects of the application and follow applicable industry standards and Product information. If Seller provides Product or system options, the user is responsible for determining that such data and specifications are suitable and sufficient for all applications and reasonably foreseeable uses of the Products or systems.

8. Loss to Buyer's Property. Any designs, tools, patterns, materials, drawings, confidential information or equipment furnished by Buyer or any other items which become Buyer's property, will be considered obsolete and may be destroyed by Seller after two consecutive years have elapsed without Buyer ordering the items manufactured using such property. Seller shall not be responsible for any loss or damage to such property while it is in Seller's possession or control.

9. Special Tooling. A tooling charge may be imposed for any special tooling, including without limitation, dies, fixtures, molds and patterns, acquired to manufacture Products. Such special tooling shall be and remain Seller's property notwithstanding payment of any charges by Buyer. In no event will Buyer acquire any interest in apparatus belonging to Seller which is utilized in the manufacture of the Products, even if such apparatus has been specially converted or adapted for such manufacture and notwithstanding any charges paid by Buyer. Unless otherwise agreed, Seller shall have the right to alter, discard or otherwise dispose of any special tooling or other property in its sole discretion at any time.

10. Buyer's Obligation; Rights of Seller. To secure payment of all sums due or otherwise, Seller shall retain a security interest in the goods delivered and this agreement shall be deemed a Security Agreement under the Uniform Commercial Code. Buyer authorizes Seller as its attorney to execute and file on Buyer's behalf all documents Seller deems necessary to perfect its security interest.

11. Improper use and Indemnity. Buyer shall indemnify, defend, and hold Seller harmless from any claim, liability, damages, lawsuits, and costs (including attorney fees), whether for personal injury, property damage, patent, trademark or copyright infringement or any other claim, brought by or incurred by Buyer, Buyer's employees, or any other person, arising out of: (a) improper selection, improper application or other misuse of Products purchased by Buyer from Seller; (b) any act or omission, negligent or otherwise, of Buyer; (c) Seller's use of patterns, plans, drawings, or specifications furnished by Buyer to manufacture Product; or (d) Buyer's failure to comply with these terms and conditions. Seller shall not indemnify Buyer under any circumstance except as otherwise provided.

12. Cancellations and Changes. Orders shall not be subject to cancellation or change by Buyer for any reason, except with Seller's written consent and upon terms that will indemnify, defend and hold Seller harmless against all direct, incidental and consequential loss or damage. Seller may change product features, specifications, designs and availability with notice to Buyer.

13. Limitation on Assignment. Buyer may not assign its rights or obligations under this agreement without the prior written consent of Seller.

14. Force Majeure. Seller does not assume the risk and shall not be liable for delay or failure to perform any of Seller's obligations by reason of circumstances beyond the reasonable control of Seller (hereinafter "Events of Force Majeure"). Events of Force Majeure shall include without limitation: accidents, strikes or labor disputes, acts of any government or government agency, acts of nature, delays or failures in delivery from carriers or suppliers, shortages of materials, or any other cause beyond Seller's reasonable control.

15. Waiver and Severability. Failure to enforce any provision of this agreement will not waive that provision nor will any such failure prejudice Seller's right to enforce that provision in the future. Invalidation of any provision of this agreement by legislation or other rule of law shall not invalidate any other provision herein. The remaining provisions of this agreement will remain in full force and effect.

16. Termination. Seller may terminate this agreement for any reason and at any time by giving Buyer thirty (30) days written notice of termination. Seller may immediately terminate this agreement, in writing, if Buyer: (a) commits a breach of any provision of this agreement (b) appointments a trustee, receiver or custodian for all or any part of Buyer's property (c) files a petition for relief in bankruptcy on its own behalf, or by a third party (d) makes an assignment for the benefit of creditors, or (e) dissolves or liquidates all or a majority of its assets.

17. Governing Law. This agreement and the sale and delivery of all Products hereunder shall be deemed to have taken place in and shall be governed and construed in accordance with the laws of the State of Ohio, as applicable to contracts executed and wholly performed therein and without regard to conflicts of laws principles. Buyer irrevocably agrees and consents to the exclusive jurisdiction and venue of the courts of Cuyahoga County, Ohio with respect to any dispute, controversy or claim arising out of or relating to this agreement.

18. Indemnity for Infringement of Intellectual Property Rights. Seller shall have no liability for infringement of any patents, trademarks, copyrights, trade dress, trade secrets or similar rights except as provided in this Section. Seller will defend and indemnify Buyer against allegations of infringement of U.S. patents, U.S. trademarks, copyrights, trade dress and trade secrets ("Intellectual Property Rights"). Seller will defend at its expense and will pay the cost of any settlement or damages awarded in an action brought against Buyer based on an allegation that a Product sold pursuant to this Agreement infringes the Intellectual Property Rights of a third party. Seller's obligation to defend and indemnify Buyer is contingent on Buyer notifying Seller within ten (10) days after Buyer becomes aware of such allegations of infringement, and Seller having sole control over the defense of any allegations or actions including all negotiations for settlement or compromise. If a Product is subject to a claim that it infringes the Intellectual Property Rights of a third party, Seller may, at its sole expense and option, procure for Buyer the right to continue using the Product, replace or modify the Product so as to make it noninfringing, or offer to accept return of the Product and return the purchase price less a reasonable allowance for depreciation. Notwithstanding the foregoing, Seller shall have no liability for claims of infringement based on information provided by Buyer, or directed to Products delivered hereunder for which the designs are specified in whole or part by Buyer, or infringements resulting from the modification, combination or use in a system of any Product sold hereunder. The foregoing provisions of this Section shall constitute Seller's sole and exclusive liability and Buyer's sole and exclusive remedy for infringement of Intellectual Property Rights.

19. Entire Agreement. This agreement contains the entire agreement between the Buyer and Seller and constitutes the final, complete and exclusive expression of the terms of sale. All prior or contemporaneous written or oral agreements or negotiations with respect to the subject matter are herein merged.

20. Compliance with Law, U. K. Bribery Act and U.S. Foreign Corrupt Practices Act. Buyer agrees to comply with all applicable laws and regulations, including both those of the United Kingdom and the United States of America, and of the country or countries of the Territory in which Buyer may operate, including without limitation the U. K. Bribery Act, the U.S. Foreign Corrupt Practices Act ("FCPA") and the U.S. Anti-Kickback Act (the "Anti-Kickback Act"), and agrees to indemnify and hold harmless Seller from the consequences of any violation of such provisions by Buyer, its employees or agents. Buyer acknowledges that they are familiar with the provisions of the U. K. Bribery Act, the FCPA and the Anti-Kickback Act, and certifies that Buyer will adhere to the requirements thereof. In particular, Buyer represents and agrees that Buyer shall not make any payment or give anything of value, directly or indirectly to any governmental official, any foreign political party or official thereof, any candidate for foreign political office, or any commercial entity or person, for the purpose of influencing such person to purchase products or otherwise benefit the business of Seller.

07/14

Parker Hannifin Corporation
Chelsea Products Division
Olive Branch, MS 38654 USA

Parker Worldwide

Europe, Middle East, Africa

AE – United Arab Emirates, Dubai
Tel: +971 4 8127100
parker.me@parker.com

AT – Austria, Wiener Neustadt
Tel: +43 (0)2622 23501-0
parker.austria@parker.com

AT – Eastern Europe, Wiener Neustadt
Tel: +43 (0)2622 23501 900
parker.easteurope@parker.com

AZ – Azerbaijan, Baku
Tel: +994 50 22 33 458
parker.azerbaijan@parker.com

BE/LU – Belgium, Nivelles
Tel: +32 (0)67 280 900
parker.belgium@parker.com

BG – Bulgaria, Sofia
Tel: +359 2 980 1344
parker.bulgaria@parker.com

BY – Belarus, Minsk
Tel: +375 17 209 9399
parker.belarus@parker.com

CH – Switzerland, Etoy
Tel: +41 (0)21 821 87 00
parker.switzerland@parker.com

CZ – Czech Republic, Klecany
Tel: +420 284 083 111
parker.czechrepublic@parker.com

DE – Germany, Kaarst
Tel: +49 (0)2131 4016 0
parker.germany@parker.com

DK – Denmark, Ballerup
Tel: +45 43 56 04 00
parker.denmark@parker.com

ES – Spain, Madrid
Tel: +34 902 330 001
parker.spain@parker.com

FI – Finland, Vantaa
Tel: +358 (0)20 753 2500
parker.finland@parker.com

FR – France, Contamine s/Arve
Tel: +33 (0)4 50 25 80 25
parker.france@parker.com

GR – Greece, Athens
Tel: +30 210 933 6450
parker.greece@parker.com

HU – Hungary, Budaoers
Tel: +36 23 885 470
parker.hungary@parker.com

IE – Ireland, Dublin
Tel: +353 (0)1 466 6370
parker.ireland@parker.com

IT – Italy, Corisico (MI)
Tel: +39 02 45 19 21
parker.italy@parker.com

KZ – Kazakhstan, Almaty
Tel: +7 7273 561 000
parker.easteurope@parker.com

NL – The Netherlands, Oldenzaal
Tel: +31 (0)541 585 000
parker.nl@parker.com

NO – Norway, Asker
Tel: +47 66 75 34 00
parker.norway@parker.com

PL – Poland, Warsaw
Tel: +48 (0)22 573 24 00
parker.poland@parker.com

PT – Portugal, Leca de Palmeira
Tel: +351 22 999 7360
parker.portugal@parker.com

RO – Romania, Bucharest
Tel: +40 21 252 1382
parker.romania@parker.com

RU – Russia, Moscow
Tel: +7 495 645-2156
parker.russia@parker.com

SE – Sweden, Spånga
Tel: +46 (0)8 59 79 50 00
parker.sweden@parker.com

SK – Slovakia, Banská Bystrica
Tel: +421 484 162 252
parker.slovakia@parker.com

SL – Slovenia, Novo Mesto
Tel: +386 7 337 6650
parker.slovenia@parker.com

TR – Turkey, Istanbul
Tel: +90 216 4997081
parker.turkey@parker.com

UA – Ukraine, Kiev
Tel: +380 44 494 2731
parker.ukraine@parker.com

UK – United Kingdom, Warwick
Tel: +44 (0)1926 317 878
parker.uk@parker.com

ZA – South Africa, Kempton Park
Tel: +27 (0)11 961 0700
parker.southafrica@parker.com

North America

CA – Canada, Milton, Ontario
Tel: +1 905 693 3000

MX – Mexico, Toluca
Tel: +52 72 2275 4200

Asia Pacific

AU – Australia, Castle Hill
Tel: +61 (0)2-9634 7777

CN – China, Shanghai
Tel: +86 21 2899 5000

HK – Hong Kong
Tel: +852 2428 8008

IN – India, Mumbai
Tel: +91 22 6513 7081-85

JP – Japan, Fujisawa
Tel: +81 (0)4 6635 3050

KR – South Korea, Seoul
Tel: +82 2 559 0400

MY – Malaysia, Shah Alam
Tel: +60 3 7849 0800

NZ – New Zealand, Mt Wellington
Tel: +64 9 574 1744

SG – Singapore
Tel: +65 6887 6300

TH – Thailand, Bangkok
Tel: +662 717 8140

TW – Taiwan, New Taipei City
Tel: +886 2 2298 8987

South America

AR – Argentina, Buenos Aires
Tel: +54 3327 44 4129

BR – Brazil, Cachoeirinha RS
Tel: +55 51 3470 9144

CL – Chile, Santiago
Tel: +56 2 623 1216

Pan Am, Miami
Tel: +1 305-470-8800

Parker Hannifin Corporation
Chelsea Products Division
8225 Hacks Cross Road
Olive Branch, Mississippi 38654 USA
www.parker.com/chelsea

BLI 06/19 5C

Parker | Chelsea