DENISON HYDRAULICS
Pressure Controls – Flanged Type

Series R5 with 3 ports

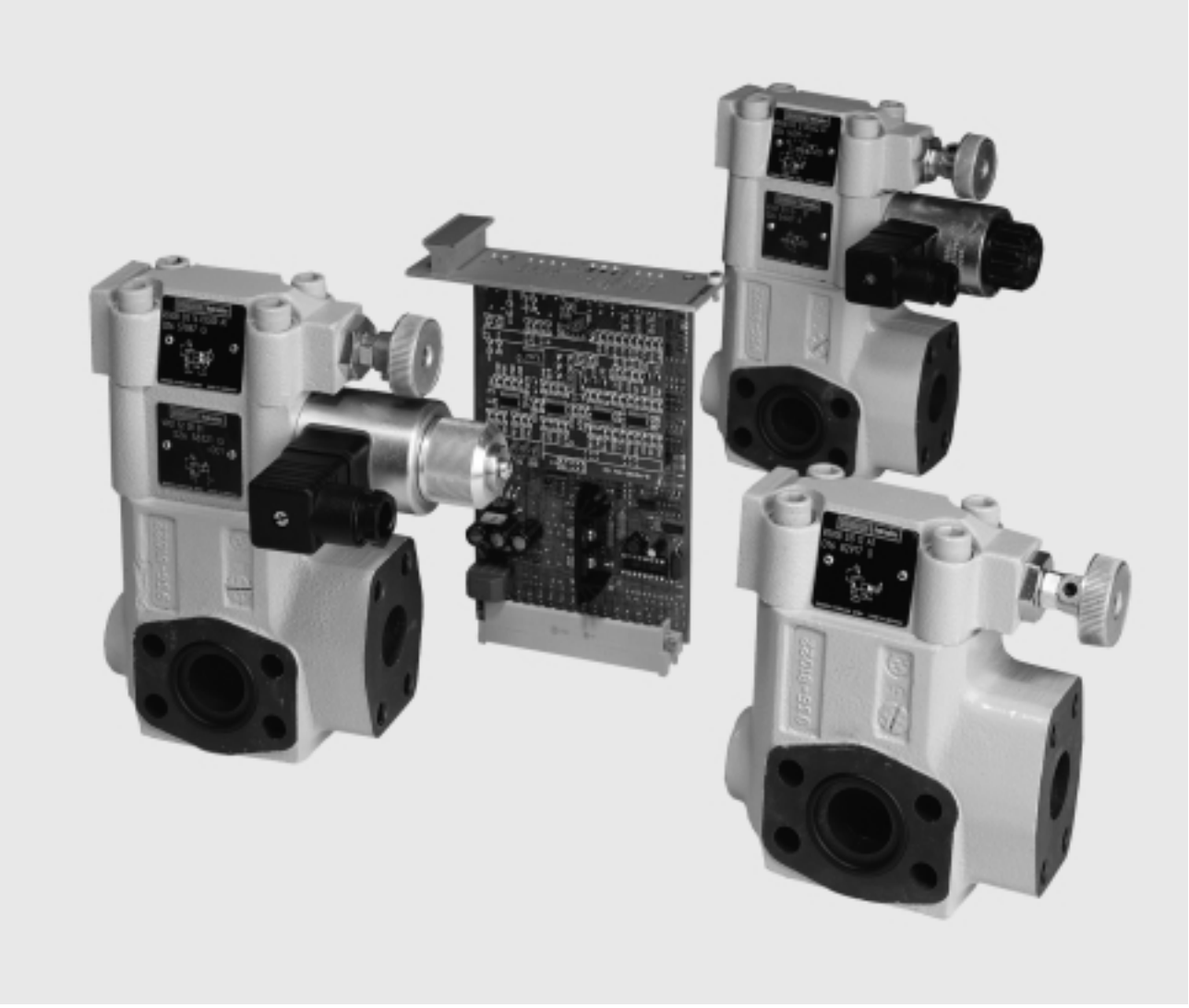

Publ. S3–ML 290–B, replaces S3–ML 290-A

DENISON Hydraulics

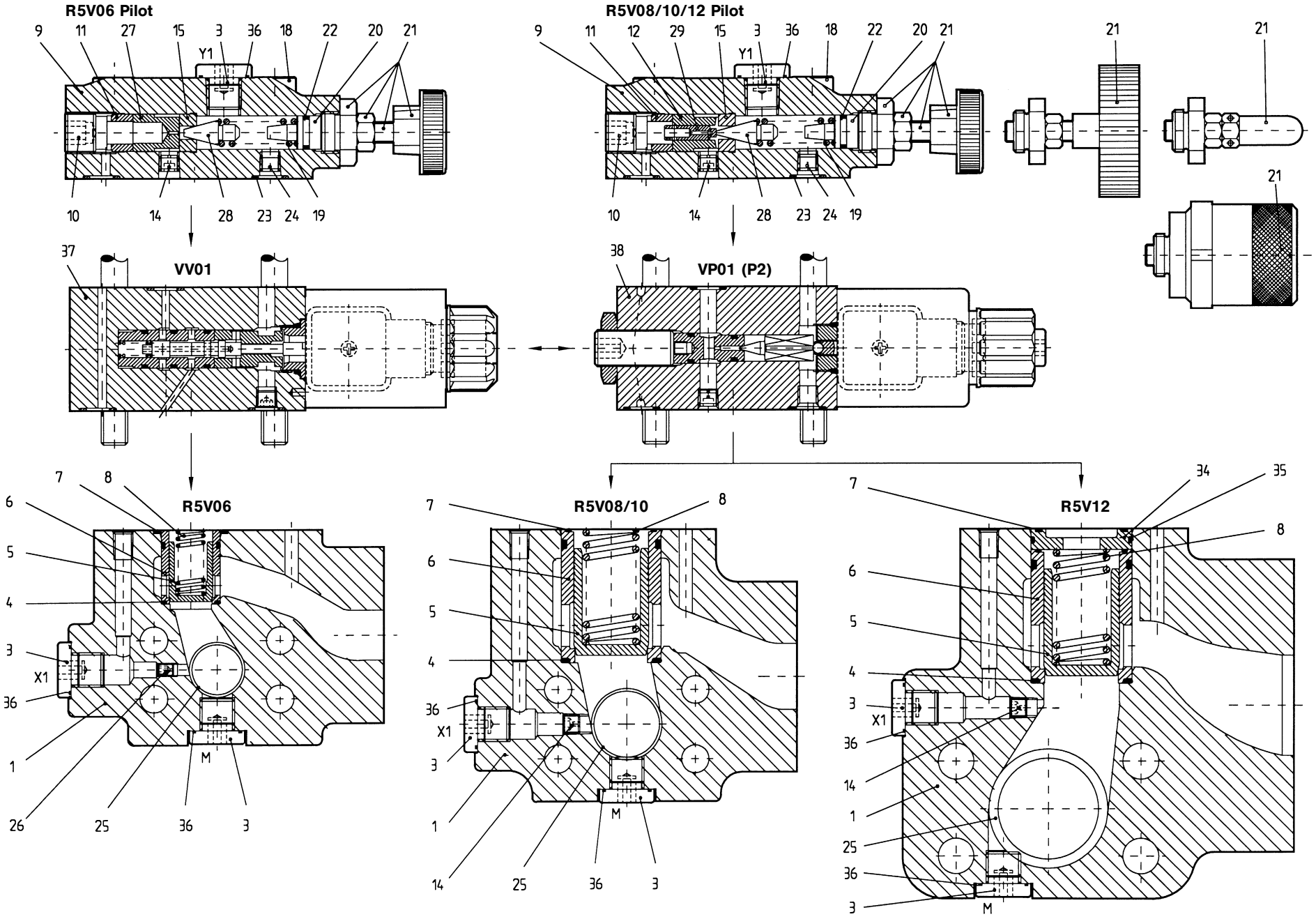
R5V06 Pilot
R5V08/10/12 Pilot
VV01
VP01 (P2)
R5V06
R5V08/10
R5V12
Y1
X1
M

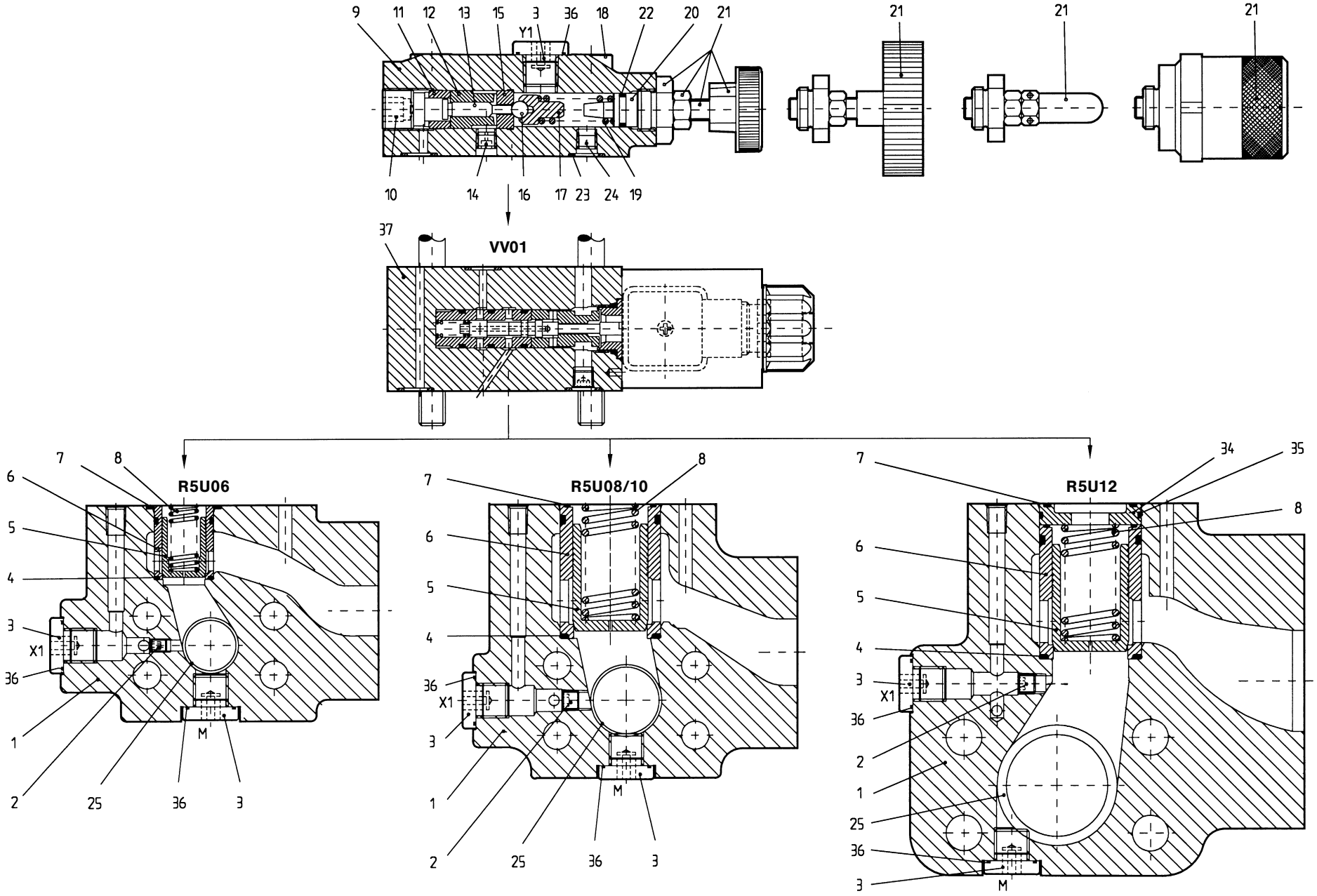
9
11
12
13
15
3
36
18
22
20
21
Y1
10
14
16
17
23
24
19
37
VV01
R5U06
R5U08/10
R5U12
7
8
6
5
4
3
X1
36
1
2
25
M
34
35

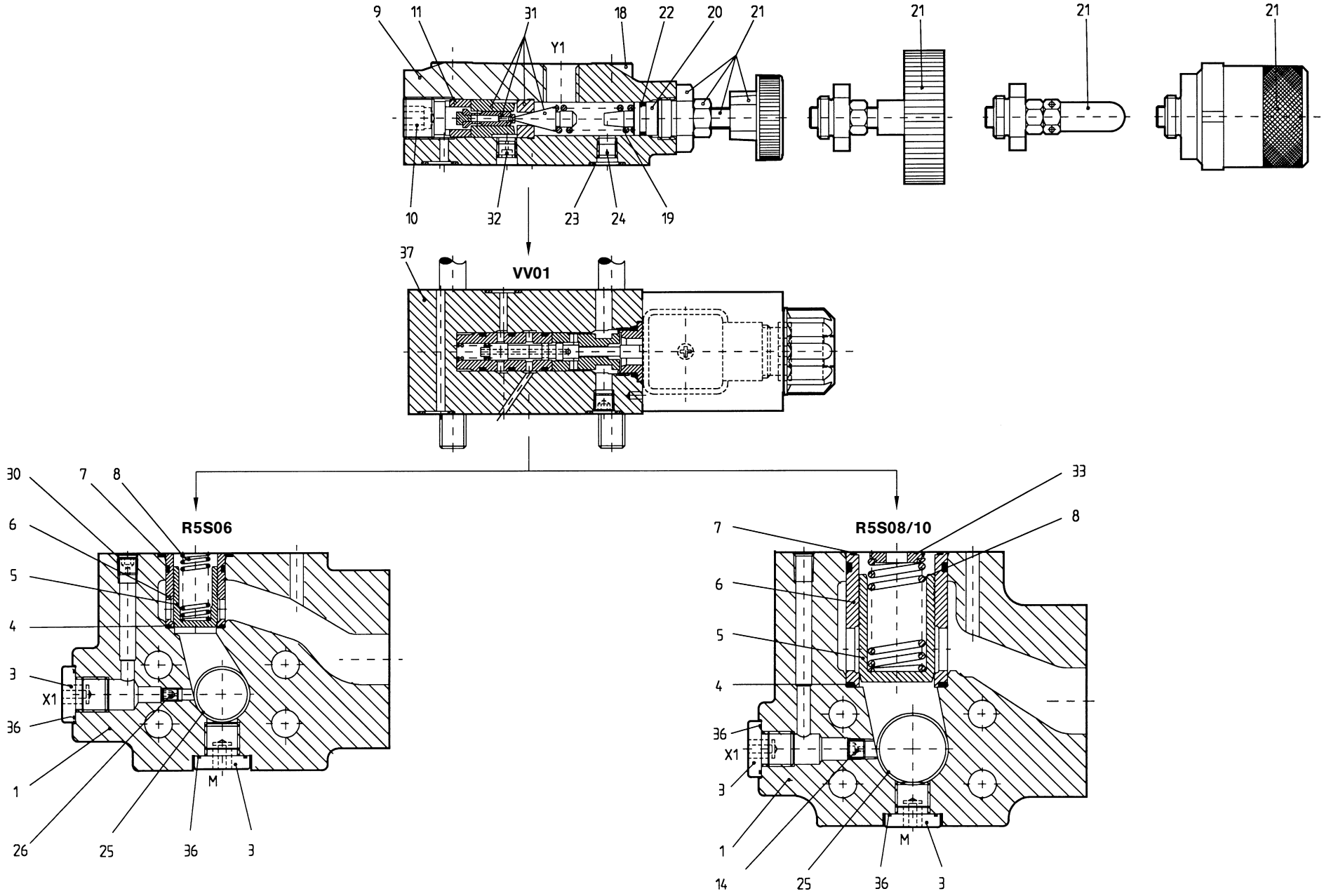
9
11
31
18
22
20
21
Y1
10
32
23
24
19
37
VV01
R5S06
30
7
8
6
5
4
3
X1
36
1
26
25
36
3
M
R5S08/10
33
8
7
6
5
4
36
X1
3
1
14
25
36
3
M

Item Pos. Réf.	English	Deutsch	Français	Italiano	Español	Part No. Teil - Nr. Code No. Cod. No. Código	Qty. Stck. Qté. Qtà. Ctd. R5V / R5U / R5S 06	08	10	12[1)]
1	Body SAE (R5U)	Gehäuse SAE (R5U)	Corps SAE (R5U)	Corpo SAE (R5U)	Cuerpo SAE (R5U)	036-84950-0	1			
	Body BSP (R5U)	Gehäuse BSP (R5U)	Corps BSP (R5U)	Corpo BSP (R5U)	Cuerpo BSP (R5U)	036-86333-0	1			
	Body SAE (R5V / R5S)	Gehäuse SAE (R5V / R5S)	Corps SAE (R5V / R5S)	Corpo SAE (R5V / R5S)	Cuerpo SAE (R5V / R5S)	036-86323-0	1			
	Body BSP (R5V / R5S)	Gehäuse BSP (R5V / R5S)	Corps BSP (R5V / R5S)	Corpo BSP (R5V / R5S)	Cuerpo BSP (R5V / R5S)	036-84899-0	1			
	Body SAE (R5U)	Gehäuse SAE (R5U)	Corps SAE (R5U)	Corpo SAE (R5U)	Cuerpo SAE (R5U)	036-86334-0		1		
	Body BSP (R5U)	Corps BSP (R5U)	Corpo BSP (R5U)	Cuerpo BSP (R5U)	Cuerpo BSP (R5U)	036-84951-0		1		
	Body SAE (R5V / R5S)	Gehäuse SAE (R5V / R5S)	Corps SAE (R5V / R5S)	Corpo SAE (R5V / R5S)	Cuerpo SAE (R5V / R5S)	036-86324-0		1		
	Body BSP (R5V / R5S)	Gehäuse BSP (R5V / R5S)	Corps BSP (R5V / R5S)	Corpo BSP (R5V / R5S)	Cuerpo BSP (R5V / R5S)	036-84900-0		1		
	Body SAE (R5U)	Gehäuse SAE (R5U)	Corps SAE (R5U)	Corpo SAE (R5U)	Cuerpo SAE (R5U)	036-86335-0			1	
	Body BSP (R5U)	Gehäuse BSP (R5U)	Corps BSP (R5U)	Corpo BSP (R5U)	Cuerpo BSP (R5U)	036-84952-0			1	
	Body SAE (R5V / R5S)	Gehäuse SAE (R5V / R5S)	Corps SAE (R5V / R5S)	Corpo SAE (R5V / R5S)	Cuerpo SAE (R5V / R5S)	036-86325-0			1	
	Body BSP (R5V / R5S)	Gehäuse BSP (R5V / R5S)	Corps BSP (R5V / R5S)	Corpo BSP (R5V / R5S)	Cuerpo BSP (R5V / R5S)	036-84901-0			1	
	Body SAE (R5U)	Gehäuse SAE (R5U)	Corps SAE (R5U)	Corpo SAE (R5U)	Cuerpo SAE (R5U)	036-86336-0				1
	Body BSP (R5U)	Gehäuse BSP (R5U)	Corps BSP (R5U)	Corpo BSP (R5U)	Cuerpo BSP (R5U)	036-84953-0				1
	Body SAE (R5V 420 bar)	Gehäuse SAE (R5V 420 bar)	Corps SAE (R5V 420 bar)	Corpo SAE (R5V 420 bar)	Cuerpo SAE (R5V 420 bar)	036-86329-0				1
	Body BSP (R5V 420 bar)	Gehäuse BSP (R5V 420 bar)	Corps BSP (R5V 420 bar)	Corpo BSP (R5V 420 bar)	Cuerpo BSP (R5V 420 bar)	036-84946-0				1
	Body SAE (R5V 210 bar)	Gehäuse SAE (R5V 210 bar)	Corps SAE (R5V 210 bar)	Corpo SAE (R5V 210 bar)	Cuerpo SAE (R5V 210 bar)	036-86328-0				1
	Body BSP (R5V 210 bar)	Gehäuse BSP (R5V 210 bar)	Corps BSP (R5V 210 bar)	Corpo BSP (R5V 210 bar)	Cuerpo BSP (R5V 210 bar)	036-84902-0				1
2	Plug	Stopfen	Bouchon	Tappo	Tapón	311-60002-2	1			
	Plug	Stopfen	Bouchon	Tappo	Tapón	431-90104-0		1	1	1
3	Plug (SAE)	Stopfen (SAE)	Bouchon (SAE)	Tappo (SAE)	Tapón (SAE)	488-35001-0	2, 3			
	Plug (BSP)	Stopfen (BSP)	Bouchon (BSP)	Tappo (BSP)	Tapón (BSP)	036-84618-0	2, 3			
4	O-Ring	Runddichtring	Joint torique	O-Ring	Junta Tórica	691-00018-0	2			
	O-Ring	Runddichtring	Joint torique	O-Ring	Junta Tórica	691-00125-0		2	2	2
5	Piston (R5U)	Kolben (R5U)	Clapet (R5U)	Pistone (R5U)	Pistón (R5U)	036-38466-0	1			
	Piston (R5V, R5S)	Kolben (R5V, R5S)	Clapet (R5V, R5S)	Pistone (R5V, R5S)	Pistón (R5V, R5S)	036-38444-0	1			
	Piston (R5U)	Kolben (R5U)	Clapet (R5U)	Pistone (R5U)	Pistón (R5U)	036-32902-0		1	1	1
	Piston (R5V, R5S)	Kolben (R5V, R5S)	Clapet (R5V, R5S)	Pistone (R5V, R5S)	Pistón (R5V, R5S)	036-32803-0		1	1	1
6	Sleeve (R5V, R5V...P2, R5U)	Hülse (R5V, R5V...P2, R5U)	Chemise (R5V, R5V...P2, R5U)	Camicia (R5V, R5V...P2, R5U)	Camisa (R5V, R5V...P2, R5U)	036-38442-0	1			
	Sleeve (R5V...P2)	Hülse (R5V...P2)	Chemise (R5V...P2)	Camicia (R5V...P2)	Camisa (R5V...P2)	036-41667-0		1	1	1
	Sleeve (R5S)	Hülse (R5S)	Chemise (R5S)	Camicia (R5S)	Camisa (R5S)	036-38464-0	1			
	Sleeve (R5V, R5U)	Hülse (R5V, R5U)	Chemise (R5V, R5U)	Camicia (R5V, R5U)	Camisa (R5V, R5U)	036-27549-0		1	1	1
	Sleeve (R5S)	Hülse (R5S)	Chemise (R5S)	Camicia (R5S)	Camisa (R5S)	036-41667-0		1	1	
7	O-Ring	Runddichtring	Joint torique	O-Ring	Junta Tórica	691-00022-0	1			
	O-Ring	Runddichtring	Joint torique	O-Ring	Junta Tórica	691-00026-0		1	1	1

Item Pos. Réf.	English	Deutsch	Français	Italiano	Español	Part No. Teil - Nr. Code No. Cod. No. Código	Qty. Stck. Qté. Qtà. Ctd. R5V / R5U / R5S 06	08	10	12[1)]
8	Spring	Feder	Ressort	Molla	Muelle	036-38448-0	1			
	Spring	Feder	Ressort	Molla	Muelle	036-27547-0		1	1	1
	Spring (R5V...P2)	Feder (R5V...P2)	Ressort (R5V...P2)	Molla (R5V...P2)	Muelle (R5V...P2)	036-32024-0		1	1	1
9	Body (SAE)	Gehäuse (SAE)	Corps (SAE)	Corpo (SAE)	Cuerpo (SAE)	036-86318-0	1			
	Body (BSP)	Gehäuse (BSP)	Corps (BSP)	Corpo (BSP)	Cuerpo (BSP)	036-84445-0	1			
	Body without port Y1	Gehäuse ohne Anschluß Y1	Corps sans orifice Y1	Corpo senza connessione Y1	Cuerpo sin Boca Y1	036-84444-0	1			
10	Plug	Stopfen	Bouchon	Tappo	Tapón	312-35051-0	1			
11	Spacer	Distanzbuchse	Entretoise	Distanziale	Espaciador	036-27548-0	1			
12	Piston guide:	Kolbenführung:	Fourrure:	Guida pistone:	Guia del Pistón:					
	R5U 105, 210 bar (20%)	R5U 105, 210 bar (20%)	R5U 105, 210 bar (20%)	R5U 105, 210 bar (20%)	R5U 105, 210 bar (20%)	036-33024-0	1			
	R5U 350 bar (15%), R5V	R5U 350 bar (15%), R5V	R5U 350 bar (15%), R5V	R5U 350 bar (15%), R5V	R5U 350 bar (15%), R5V	036-11710-0	1			
13	Control piston:	Steuerkolben:	Piston stabilisateur:	Pistone di controllo:	Pistón de Control:					
	R5U 105, 210 bar (20%)	R5U 105, 210 bar (20%)	R5U 105, 210 bar (20%)	R5U 105, 210 bar (20%)	R5U 105, 210 bar (20%)	036-33023-0	1			
	R5U 350 bar (15%)	R5U 350 bar (15%)	R5U 350 bar (15%)	R5U 350 bar (15%)	R5U 350 bar (15%)	036-14679-0	1			
14	Orifice plug	Drosselstopfen	Vis diaphragme	Tappo forato	Tapón calibrado	036-25528-0	1, 2			
15	Seat	Sitz	Siége	Sede	Asiento	036-11692-0	1	1	1	1
	Seat (R5V12- SAE62)	Sitz (R5V12- SAE62)	Siége (R5V12- SAE62)	Sede (R5V12- SAE62)	Asiento (R5V12- SAE62)	036-48447-0				1
16	Ball	Kugel	Bille	Sfera	Bola	201-08001-0	1			
17	Ball support	Kugelträger	Siége de bille	Supporto della sfera	Soporte Bola	036-84933-0	1			
18	S.H.C. Screw 3/8"-24 UNF x 1.75"	Schraube	Vis	Vite	Tornillo Allen	359- 15220-0	4			
	on valves without VV01 or P2	bei Ventilen ohne VV01 oder P2	sur valves sans VV01 ou P2	per valvole senza VV01 e P2	para válvulas sin VV01 o P2					
	S.H.C. Screw 3/8"-24 UNF x 3.50"	Schraube	Vis	Vite	Tornillo Allen	359- 15340-0	4			
	on valves with VV01 or P2	bei Ventilen mit VV01 oder P2	sur valves avec VV01 ou P2	per valvole con VV01 e P2	para válvulas con VV01 o P2					
19	Spring 105 bar	Feder 105 bar	Ressort 105 bar	Molla 105 bar	Muelle 105 bar	036-13244-0	1	1	1	1
	Spring 210 bar	Feder 210 bar	Ressort 210 bar	Molla 210 bar	Muelle 210 bar	036-13245-0	1	1	1	1
	Spring 350 bar	Feder 350 bar	Ressort 350 bar	Molla 350 bar	Muelle 350 bar	036-12289-0	1	1	1	
	Spring 420 bar (R5V12- SAE62)	Feder 420 bar (R5V12- SAE62)	Ressort 420 bar (R5V12-SAE62	Molla 420 bar (R5V12-SAE62)	Muelle 420 bar (R5V12-SAE62)	036-12289-0				1
20	Piston	Kolben	Poussoir	Pistone	Pistón	036-21767-0	1			
21	Adjusting devices:	Verstellarten:	Dispositif de réglage:	Dispositivo di regolazione:	Dispositivos de ajuste:					
	Knob 32 mm dia.	Handrad 32 mm	Bouton moleté 32 mm	Manopola diam. 32 mm	Volante diá. 32 mm	S16-39147-0	1			
	Knob 50 mm dia.	Handrad 50 mm	Bouton moleté 50 mm	Manopola diam. 50 mm	Volante diá. 50 mm	S16-39148-0	1			
	Acorn nut with lead seal	Hutmutter plombierbar	Contre écrou	Vite e bussola di piombatura	Tapón con precinto	S16-39149-0	1			
	Lock	Schloß	Réglage par verrouillage	Manopola con serratura	Volante con liave	S16-34509-0	1			
22	O-Ring	Runddichtring	Joint torique	O-Ring	Junta Tórica	671-00012-0	1			
23	O-Ring	Runddichtring	Joint torique	O-Ring	Junta Tórica	691-00013-0	2	2	2	2

Item Pos. Réf.	English	Deutsch	Français	Italiano	Español	Part No. Teil - Nr. Code No. Cod. No. Código	Qty. Stck. Qté. Qtà. Ctd. R5V / R5U / R5S 06	08	10	12[1]
24	Plug 1/16" NPTF (for external PD)	Stopfen 1/16" NPTF (bei externem Steuerölablauf)	Bouchon 1/16" NPTF (pour drain externe)	Tappo 1/16" NPTF (per drenaggio esterno)	Tapón 1/16" NPTF (con drenaje externo)	431-90104-0	1			
25	O-Ring	Runddichtring	Joint torique	O-Ring	Junta Tórica	691-00214-0	1			
	O-Ring	Runddichtring	Joint torique	O-Ring	Junta Tórica	691-00219-0		1		
	O-Ring	Runddichtring	Joint torique	O-Ring	Junta Tórica	691-00222-0			1	
	O-Ring	Runddichtring	Joint torique	O-Ring	Junta Tórica	691-00225-0				1
26	Orifice plug	Drosselstopfen	Vis diaphragme	Tappo forato	Tapón calibrado	036-63103-0	1			
27	Orifice	Düse	Diaphragme	Forato	Diafragma	036-81029-0	1			
28	Cone	Kegel	Cône	Cono	Cono	036-81030-0	1			
	Cone	Kegel	Cône	Cono	Cono	036-12288-0		1	1	1
	Cone (R5V12- SAE62)	Kegel (R5V12- SAE62)	Cône (R5V12- SAE62)	Cono (R5V12- SAE12)	Cono (R5V12- SAE62)	036-48448-0				1
29	Control piston	Steuerkolben	Piston stabilisateur	Pistone di controllo	Pistón de Control	036-11694-0		1	1	1
30	Orifice plug	Drosselstopfen	Vis diaphragme	Tappo forato	Tapón calibrado	036-12819-0	1			
31	Pilot control subass'y	Vorsteuer-Baugruppe	Sous ensemble partie pilote	Sotto insieme di pilotaggio	Subconjunto de Pilotaje	S16-09768-0	1	1	1	
32	Orifice plug	Drosselstopfen	Vis diaphragme	Tappo forato	Tapón calibrado	036-13786-0	1	1	1	
33	Spring retainer	Federteller	Guide de ressort	Portamolla	Soporto Muelle	036-45247-0		1	1	
34	Spacer	Distanzring	Entretoise	Distanziale	Espaciador	036-36562-0				1
35	O-Ring	Runddichtring	Joint torique	O-Ring	Junta Tórica	691-00028-0				1
36	O-Ring	Runddichtring	Joint torique	O-Ring	Junta Tórica	691-00016-0	2, 3			
37	Vent Valve VV01	Entlastungsventil VV01	Valve de mise en by-pass VV01	Valvola di messa a scarico VV01	Válvula de Venting VV01	[2]	1			
38	Proportional Valve P2	Proportionalventil P2	Valve pilote proportionelle P2	Valvola proporzionale P2	Válvula Proporcional P2	[3]	1			
[1]	R5V, R5U only	Nur R5V, R5U	R5V, R5U seulement	Solo per R5V, R5U	Sólo para R5V, R5U					
[2]	Spares see information S3-ML 215.	Ersatzteile siehe Information S3- ML 215.	Pièces de rechange voir information S3-ML 215.	Parti di ricambio si veda boll. S3-ML 215.	Recambios concultar boletin S3-ML 215.					
[3]	Spares see information S3-ML 220.	Ersatzteile siehe Information S3- ML 220.	Pièces de rechange voir information S3-ML 220.	Parti di ricambio si veda boll. S3-ML 220.	Recambios concultar boletin S3-ML 220.					

Item Pos. Réf.	*English*	*Deutsch*	*Français*	*Italiano*	*Español*	Part No. Teil - Nr. Code No. Cod. No. Código	Qty. Stck. Qté. Qtà. Ctd. R5V / R5U / R5S 06	08	10	12[1)]
	Not shown:	**Nicht dargestellt:**	**Non représenté:**	**Non rappresentato:**	**No representado:**					
	Name plate	Typenschild	Plaque d'identification	Targhetta di identificazione	Placa Nomenclatura	036-84772-0	1			
	Rivet	Kerbnagel	Rivet	Rivetto	Remache	320-10203-0	2			
	Seal Kits:	**Dichtringsätze:**	**Pochettes de joints:**	**Serie guarnizioni:**	**Juegos de Juntas:**					
	Seals (NBR-S1)	Dichtringe (NBR-S1)	Joints (NBR-S1)	Guarnizioni (NBR-S1)	Juntas (NBR-S1)	S16-91850-0	1			
	Seals (FPM-S5)	Dichtringe (FPM-S5)	Joints (FPM-S5)	Guarnizioni (FPM-S5)	Juntas (FPM-S5)	S16-91850-5	1			
	Seals (NBR-S1)	Dichtringe (NBR-S1)	Joints (NBR-S1)	Guarnizioni (NBR-S1)	Juntas (NBR-S1)	S26-55809-0		1		
	Seals (FPM-S5)	Dichtringe (FPM-S5)	Joints (FPM-S5)	Guarnizioni (FPM-S5)	Juntas (FPM-S5)	S26-55809-5		1		
	Seals (NBR-S1)	Dichtringe (NBR-S1)	Joints (NBR-S1)	Guarnizioni (NBR-S1)	Juntas (NBR-S1)	S16-91852-0			1	
	Seals (FPM-S5)	Dichtringe (FPM-S5)	Joints (FPM-S5)	Guarnizioni (FPM-S5)	Juntas (FPM-S5)	S16-91852-5			1	
	Seals (NBR-S1)	Dichtringe (NBR-S1)	Joints (NBR-S1)	Guarnizioni (NBR-S1)	Juntas (NBR-S1)	S26-27421-0				1
	Seals (FPM-S5)	Dichtringe (FPM-S5)	Joints (FPM-S5)	Guarnizioni (FPM-S5)	Juntas (FPM-S5)	S26-27421-5				1

omit for version without VV01 & without P2

Model Number R5. .. – . . . – . . – .. – ... – A 1 – __

Series
R5V = Pressure Relief Valve
R5U = Pressure Unloading Valve
R5S = Sequence Valve

Size
06 = 3/4″
08 = 1″
10 = 1 1/4″
12 = 1 1/2″ (R5V, R5U only)

Max. pressure
3 = 210 bar – SAE 61 flange (R5V/R5U12)
4 = 280 bar – SAE 61 flange (R5.10)
5 = 350 bar – SAE 61 flange (R5.06/08)
6 = 420 bar – SAE 62 flange (R5V12 only)

Body
Ports X1[2], Y1[1], M[2]
3 = SAE-4 (7/16″–20 UNF)
9 = G 1/4″

[1] Port Y1 is only available at external PD (codes 4 & 6) from the pilot head
[2] closed when supplied

Pressure setting range
1 = 7...105 bar (R5U: Pressure differential 20 %)
3 = 7...210 bar (R5U: Pressure differential 20 %)
5 = 7...350 bar (R5U: Pressure differential 15 %)
6 = 7...420 bar (R5V12 only)

Type of control
1 = Hand knob 32 mm dia.
2 = Hand knob 50 mm dia. (not for version with vent valve VV01 or P2)
3 = Acorn nut with lead seal
4 = Adjusting device with key lock (key order no. 700–70619)

Pilot connection
2 = Internal PD – internal PP (R5V)
4 = External PD – external PP* (R5U)
5 = Internal PD – external PP* (R5U)
6 = External PD – internal PP (R5V, R5S)
* External pilot pressure connection on flange face (port X2)

3-way vent valve VV01
09 = with manual override } Solenoid de-energized: open to tank
10 = without manual override } Solenoid energized: vent line blocked
11 = with manual override } Solenoid de-energized: vent line blocked
12 = without manual override } Solenoid energized: open to tank

P2 = Electric proportional pressure control (12 V DC only, R5V only)

Solenoid voltage and current
W01 = 115 V / 60 Hz
W02 = 230 V / 60 Hz
W06 = 115 V / 50 Hz
W07 = 230 V / 50 Hz
} AC

[1] G0R = 12 V
G0Q = 24 V
G0H = 48 V
} DC

[1] R5V....P2 = 12 V DC only

Design letter

Seal class
1 = Standard (for special fluids consult DENISON)

Modifications

Rights of alteration reserved. Änderung vorbehalten. Sous réserve d'eventuelles modification.
Con riserva di modifica. Modificaciones posibles dentro de interés de una mejora.