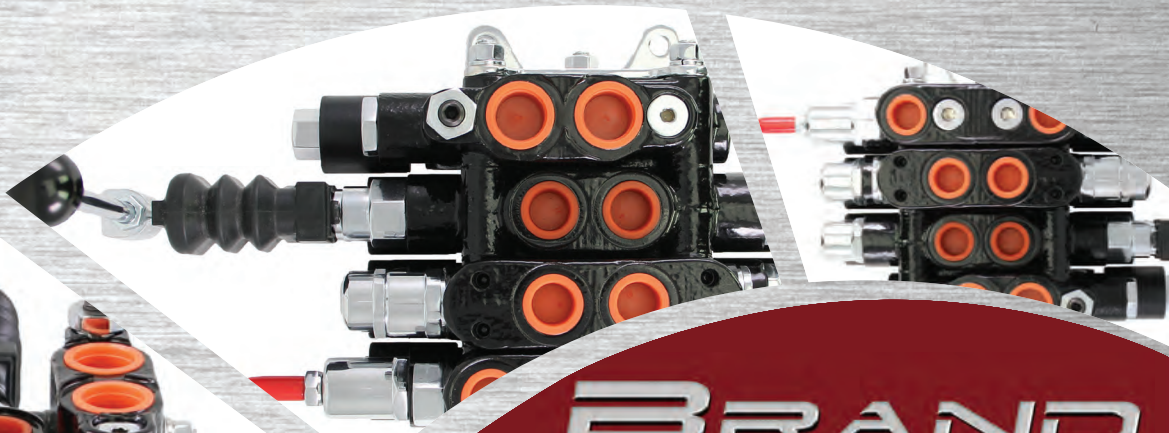

BRAND HYDRAULICS Co.

Made in the Heartland of America
Serving the World

Engineering & Manufacturing Solutions

Series 36

Electric Sectional Directional Control Valve

Specifications:

- 12 gpm (45.4 lpm) Nominal Capacity
- 3500 psi (241 bar).
- 100 psi (6.9 bar) max tank pressure.
- 12 sections max (consult factory for more).
- 10 Micron Filtration Recommended.
- Assembly Torque = 85 inch-lbs. (9.6 N m)
- Spool Leakage = Less than 0.50 in^3 (819 cm^3) at 1000 psi. (69 bar)
- Weight -Inlet/outlet = 6 lbs. (2.7 kg).
  - -Low spool section = 4 lbs. (1.8 kg).
  - -High spool section = 6.5 lbs. (2.9 kg).
  - -Above weights include cartridge, coil, and reliefs.
- Port Sizes -Inlet / Outlet #10SAE (7/8 – 14).
  - -Work Ports #8SAE (3/4 – 16).
- Response Time (6 gpm@2000 psi (22.7 lpm@138 bar)).
  - -110 mS for unloader.
  - -600 mS for section.
- Coil -1.25 amp Inrush current.
  - -1.00 amp Steady state current.

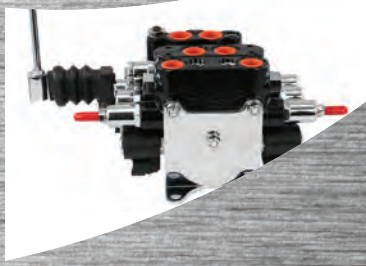

ISO 9001:2008 WITH DESIGN
Certificate #02.002.1

402.344.4434 • www.brand-hyd.com

Series 36 Electric Sectional Directional Control Valve

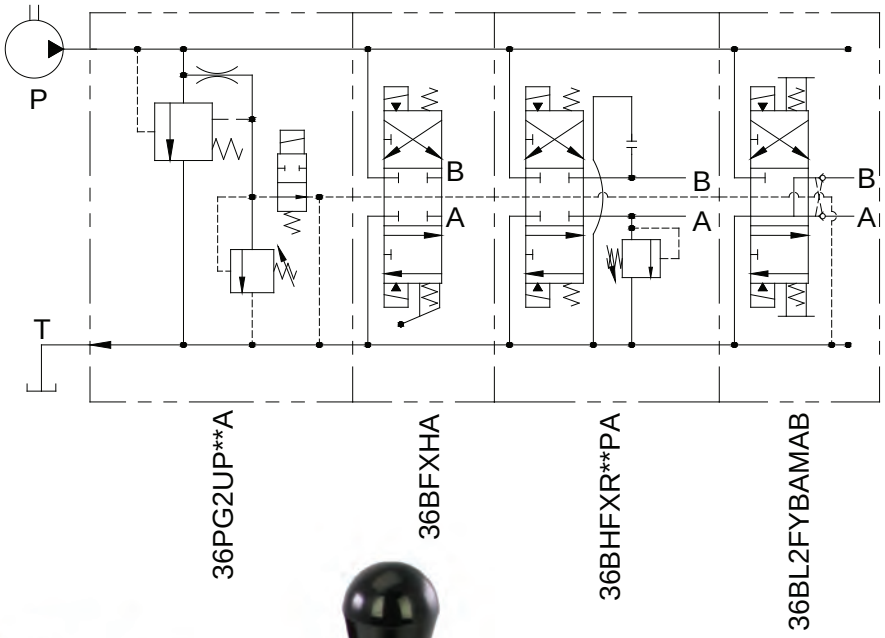

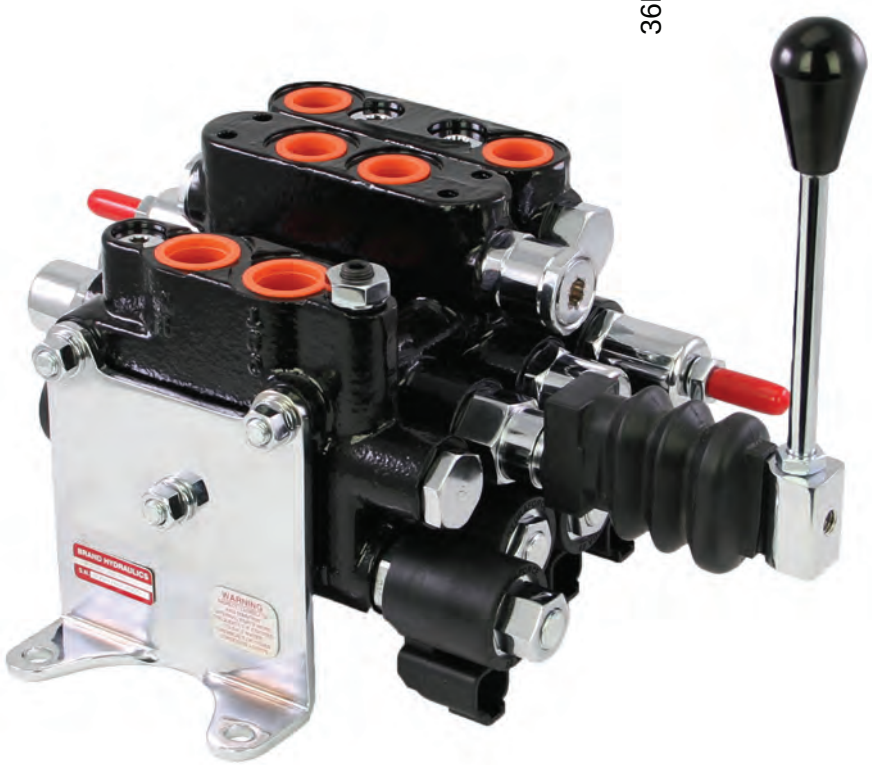

MATERIALS:

- Cast Iron Body.
- Heat Treated Steel Spools.
- Buna N O'Rings (standard).
- Stress Proof Steel Tie Rods.

FEATURES:

- PRECISION GROUND HEAT TREATED SPOOL assures long life.
- DIAMOND HONED SPOOL BORE provides consistent spool fit with low leakage.
- O'RING PORTS to eliminate leakage.
- OIL GROOVES on the spool provide smooth spool motion.
- PILOT CARTRIDGE assures positive force to shift spool.

SERIES 36 – GENERAL INFORMATION:

The Brand, Series 36 Electric Sectional Directional Control Valves are assembled to meet our customer's requirements for up to twelve individual applications per assembly. Brand Hydraulics does not charge extra for this assembly process, an assembly is priced solely on the overall sum of the prices of its components.

The Series 36 is available with electric unloading in the inlet section. The flow goes directly to tank in the neutral condition. Neutral flow does not pass through the spool sections; therefore, the neutral pressure drop to tank remains low and constant regardless of the number of spool sections. This neutral path is closed whenever a section is activated. If two or more spools are shifted simultaneously, then the spool sections are in parallel. In parallel the flow will take the path of least resistance and the lightest load will move first. The spools are shifted by solenoid controlled pilot valves. This method assures positive shifting and it also minimizes the amperage draw.

It is common to have applications where high flow (above 15 gpm (56.7 lpm)) is needed out some sections and low flow (below 15 gpm (56.7 lpm)) is needed out other sections. The Series 38 can be used for high flow and the Series 36 can be used for low flow. Series 36 and Series 38 sections can be stacked together to meet both flow requirements. Any combination up to twelve sections can be assembled. (See Series 38 literature for more details)

Flow can be controlled by machining a pocket in the pressure line so that an orifice plate can fit between the spool sections. If more than one orifice is used in an assembly, then they must be arranged with the largest orifice first (closest to the inlet). We also offer individual orifice plates to restrict the flow out of a work port.

INLETS –

Can be provided with a closed center inlet (with or without relief) which can be used in a pressure compensated system. Inlets are also available with unloading for use in systems with fixed displacement pumps.

To understand the unloading feature the following explanation may be helpful. The inlet is machined with a pilot operated relief valve, and a vent line. By manipulating the vent line we can offer the following features:

ELECTRIC UNLOADING – An inlet machined for a pilot-operated relief valve can be supplied with a vent line that is open to flow through a two-way normally open solenoid cartridge. Thus, we have electric unloading when the solenoid is de-energized and loading when the solenoid is energized. By replacing the two-way normally open solenoid cartridge with a cavity plug the vent line will be blocked and the inlet will not unload. The cavity plug is used for pressure compensated systems while still providing relief valve protection.

AUTOMATIC UNLOADING – When using the handle option it is necessary to use a specially machined inlet that allows the vent line to continue on past each spool section. The vent line is interrupted automatically whenever the handle is moved.

Series 36 Electric Sectional Directional Control Valve

Inlets can be supplied with electric unloading, or automatic unloading. Our most popular combination is an inlet machined for electric and automatic unloading. This combination allows the customer to manually control the valve with handles during an electrical failure.

LOW SPOOL SECTIONS – are available with two types of spools - open (Y) and blocked (X). Spring centering is standard on every spool section. Spring offset (O), allows the customer to use a cavity plug on the side of the spring offset instead of a solenoid and cartridge. Manual override/Stroke control (M) is available for ports A & B of each section. It allows the customer to manually move the spool, which can lower a load or to limit the travel of the spool so that it acts as a speed control. Manual handles are also available for use when there is no electricity or for manual and electric control of the same section.

HIGH SPOOL SECTIONS – offer the same options as listed for the low spool sections with the addition of individual port reliefs. Three types of reliefs are offered for high sections machined with port relief cavities – ball spring (B), area-differential (R), or area-differential with anti-cavitation check (C). The high section can also be made with a pilot-operated double lock (36BL2F).

END SPOOL SECTIONS – are the last spool section of an assembly. The end section is not an outlet and it does not have cross-holes drilled all the way through the casting.

ELECTRIC/MANUAL SECTIONS – When manual handles are used it is necessary to route the relief vent line past each spool section. The vent line is routed by specially machining each section for automatic unloading. Every section (low, high, and double lock) is available with automatic unloading (A). We can assemble any combination of electric, manual handle, or electric/manual handle controlled spool sections. If any section has automatic unloading, then every spool section in the assembly must be machined for a vent line (A).

CARTRIDGES AND COILS – are used to open and close pilot flow paths when shifting the spool electrically. The cartridges and coils must be specified for each section of an assembly. The standard cartridge and coil for a 36PG2UP** inlet section is C300-00000 (Normally open cartridge) and C500-00000 (12 VDC coil). A C100-00002 (Normally closed cartridge) and C500-00000 (12 VDC coil) are required for each work port of any work section. Please refer to "SERIES 38 – LIST OF OPTIONS AND ACCESSORIES" for other types of coils and cartridges. (Please contact factory for availability of other cartridges and coils)

ACCESSORY ITEMS - All standard tie rod kits contain rods, foot brackets, lock washers and hex nuts. Please be sure to note correct tie rod torque spec of 85 inch lbs. (9.6 N m)

SERIES 36 – GENERAL INFORMATION: Continued

ASSEMBLY MODEL CODES – and list prices for complete assemblies will be issued by the factory upon the request of an authorized Brand Distributor. All model codes that are issued become proprietary to the requesting distributor. Model codes will not be descriptive in nature, but shall be of a sequential numerical type.

Individual sections and accessories can be purchased so that custom valve stacks can be assembled or modified outside the factory.

SERIES 36 – CREATING A MODEL CODE FOR SERIES 36:

INLET SECTION: (USE THIS INLET FOR SERIES 36 & 38):

36PG2 _ _ _ _ _

CONDITION OF INLET:
C – Closed inlet
U – Unloaded inlet*

RELIEF:
OMIT – No relief
P – Adjustable pilot relief

RELIEF SETTING:
10 - 1000 psi (69.0 bar)
15 - 1500 psi (103.4 bar)
20 - 2000 psi (138.0 bar)
ETC...

OPTIONS:
A- Automatic unloading*
T - Power beyond Man/Elec.*

LOW SPOOL SECTION:

36 B F _ _ _ _ _

SPOOL TYPE:
Y – Open
X – Blocked

END SECTION:
OMIT – Center section
B – End section
W – End section, used with auto unloading and power beyond (36TG2WA)

OPTIONS:
A – Automatic unloading
C – Clevis use w/closed inlet
CA – Clevis use w/automatic unloading
H – Manual handle use w/ closed inlet
HA – Manual handle use w/ automatic unloading
M – Manual override stroke control. Choose (A) or (B) port or both.
O – Spring offset
NW – No wire through spool
D – Spring center (P to A) / detent (P to B)

*(U) – Controlled by electrical cartridge.
*(A) – Controlled by handle movement.
*(T) – Used with power beyond section (36TG2WA)

Series 36 Electric Sectional Directional Control Valve

SERIES 36 – CREATING A MODEL CODE FOR SERIES 36:
HIGH SPOOL SECTION WITH DOUBLE LOCKS:

36BL2F

SPOOL TYPE:
Y – Open
X – Blocked

END SECTION:
OMIT – Center section
B – End section
W – End section, used with auto unloading and power beyond (36TG2WA)

OPTIONS:
A – Automatic unloading
C – Clevis use w/closed inlet
CA – Clevis use w/automatic unloading
H – Manual handle use w/ closed inlet
HA – Manual handle use w/ automatic unloading
M – Manual override stroke control. Choose (A) or (B) port or both.
O – Spring offset
NW – No wire through spool
D – Spring center (P to A) / detent (P to B)

HIGH SPOOL SECTION WITH PORT RELIEF:

36BHF

SPOOL TYPE:
Y – Open
X – Blocked

END SECTION:
OMIT – Center section
B – End section
W – End section, used with auto unloading and power beyond (36TG2WA)

RELIEF (A) PORT:
B – High lift ball spring relief
C – Combo area-differ. port relief & anti-cavitation check
R – Area-differ. port relief
P – Cavity plug (No relief)
Q – Anti-cavitation check (No relief)

RELIEF (A) PORT:
10 – 1000 psi (69.0)
10 – 1500 psi (103.4 bar)
10 – 2000 psi (138.0 bar) **ECT...**

OPTIONS:
A – Automatic unloading
C – Clevis use w/closed inlet
CA – Clevis use w/automatic unloading
H – Manual handle use w/ closed inlet
HA – Manual handle use w/ automatic unloading
M – Manual override stroke control. Choose (A) or (B) port or both.
O – Spring offset
NW – No wire through spool
D – Spring center (P to A) / detent (P to B)

REPEAT RELIEF & SETTING FOR (B) PORT

SERIES 36 – EXAMPLES OF COMMON MODEL CODES:
INLET SECTIONS (USE THIS INLET FOR SERIES 36 & 38):

36PG2CP20……Inlet section, closed center and a relief set at 2000 psi (138 bar). (Other pressures available)

36PG2UP20……Inlet section, unloading, and a relief set at 2000 psi (138 bar). (Other pressures available)

36PG2UP20A....Inlet section, unloading, relief set at 2000 psi (138 bar) and automatic unloading.

LOW SPOOL SECTIONS:

36BFX……..Blocked spool, center section, and spring center.

36BFY……..Open spool, center section, and spring center.

36BFXB……...Blocked spool, end section, and spring center.

36BFYB……...Open spool, end section, and spring center.

36BFXBMAB…Blocked spool, end section, manual override for A and B port, and spring center.

36BFXA……...Blocked spool, automatic unloading, and spring center.

HIGH SPOOL SECTION WITH DOUBLE LOCKS:

36BL2FY…….Open spool, double locks, center section and spring center.

36BL2FYB……..Open spool, double locks, end section and spring center.

HIGH SPOOL SECTION WITH PORT RELIEF:

36BHFXR20R15…Blocked spool, center section, area-differential set at 2000 psi (138 bar)on port A, area-differential set at 1500 psi (103 bar)on port B, and spring center.

36BHFXB20P…….Blocked spool, center section, high lift ball spring relief set at 2000 psi (138 bar) on port A, port B has a cavity plug (no relief), and spring center.

36BHFXC20P…….Blocked spool, center section, combo area-differential and anti-cavitation relief set at 2000 psi (138 bar) on port A, port B has a cavity plug (no relief), and spring center.

TIE ROD KITS:

36TR1……Tie rod kit for valve stack containing a standard inlet and one spool section.

36TR2……Tie rod kit for valve stack containing a standard inlet and two spool sections.

36TR3……....Tie rod kit for valve stack containing a standard inlet and three spool sections.

STANDARD ASSEMBLY MODEL CODES:

36A1……..Single spool assembly, 36BFXB section, 12VDC coils, cartridges, and unloading inlet set at 2000 psi (138 bar).

36A2L……...Two double lock spool assemblies, 36BL2FY-type sections, 12VDC coils, cartridges, and unloading inlet set at 2000 psi (138 bar).

36A6……..Six spool assemblies, 36BFX-type sections, 12VDC coils, cartridges, and unloading inlet set at 2000 psi (138 bar).

Standard assemblies are available with up to twelve spool sections using the model code format outlined above for the one and two spool assemblies. (Includes 12VDC coils with 18” (457 mm) wires)

Series 36 Electric Sectional Directional Control Valve

SERIES 36 – COMPLETE LIST OF OPTIONS AND ACCESSORIES:

C100-00002……..…Normally closed, two way cartridge valve.

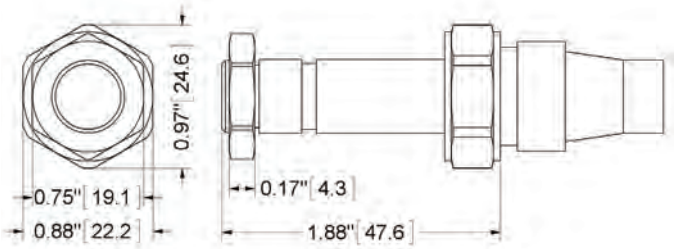

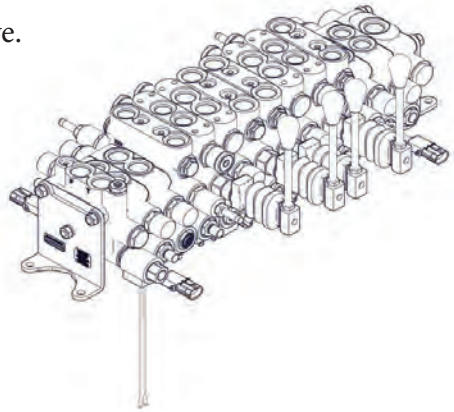

C102-00000……..…Normally closed cartridge valve, with manual override. Allows manual control of pilot oil used to shift spool. To override, push button in, twist counterclockwise 180° and release. In this position, the valve will remain open. To return to normal operation, push button in, twist clockwise 180°, and release. Override will be detented in this position. Note: on stacks with unloaded inlets, the unloader must be closed either electrically or manually, in order to provide pilot pressure at this valve.

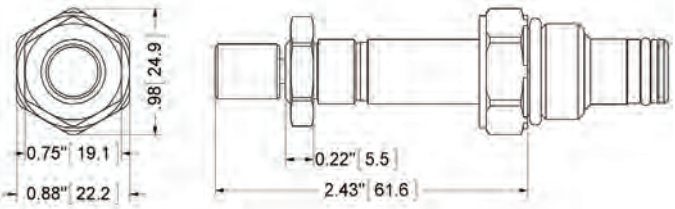

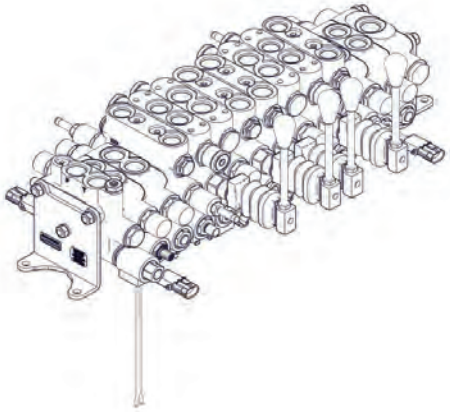

C300-00000……..Normally open, two way cartridge valve

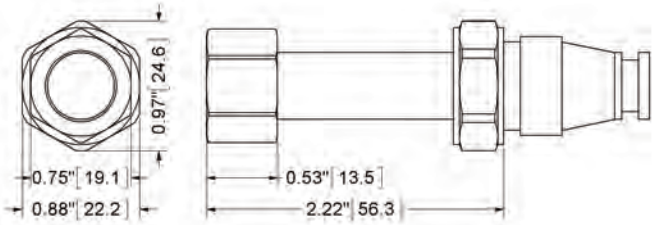

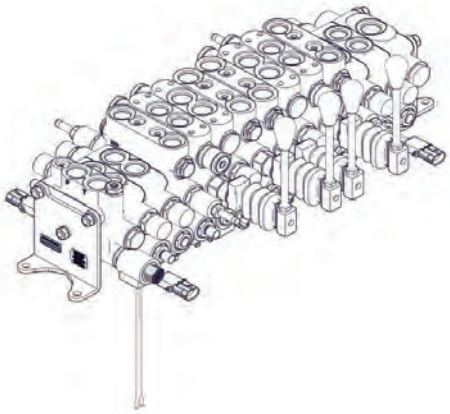

SERIES 36 – COMPLETE LIST OF OPTIONS AND ACCESSORIES:

C30M-00000…....Normally open cartridge valve, with manual override. Allows manual control of unloading valve, in inlet sections so equipped. To override, push and hold override button.

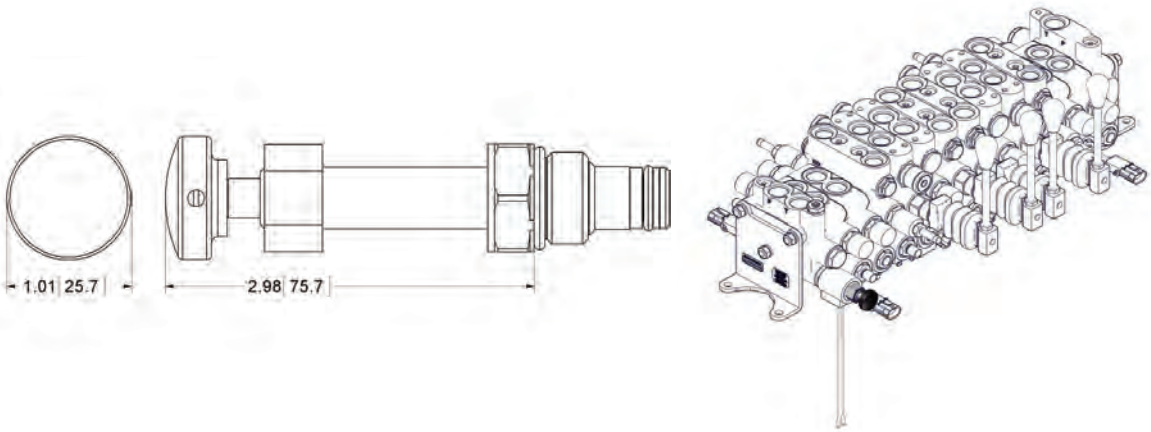

C500-00000…..…12 VDC coil with 18 GA lead wires.

C600-00000…..…24 VDC coil with 18 GA lead wires.

C800-00000…..…115 VAC coil with 18 GA lead wires.

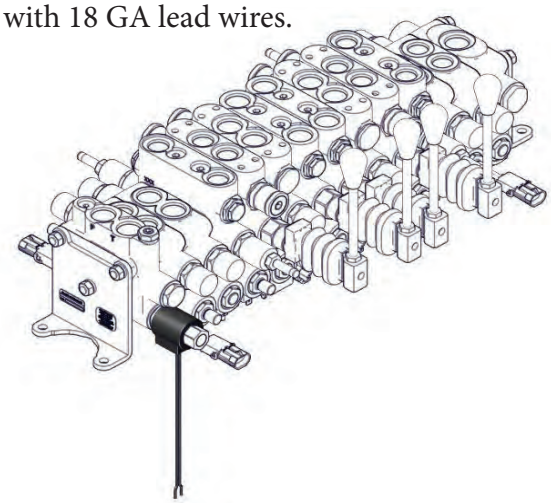

External dimensions are the same for all kits listed above.

C501-00000…..…12 VDC coil, with weatherhead connection.

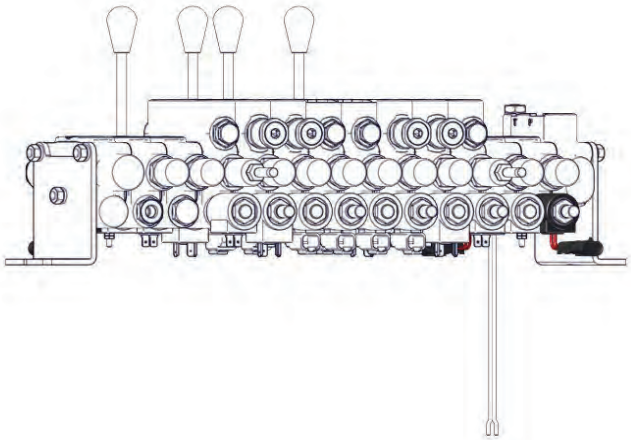

Series 36 Electric Sectional Directional Control Valve

SERIES 36 – COMPLETE LIST OF OPTIONS AND ACCESSORIES:

C503-00000……..…12 VDC coil with single 8-32 stud internal ground.

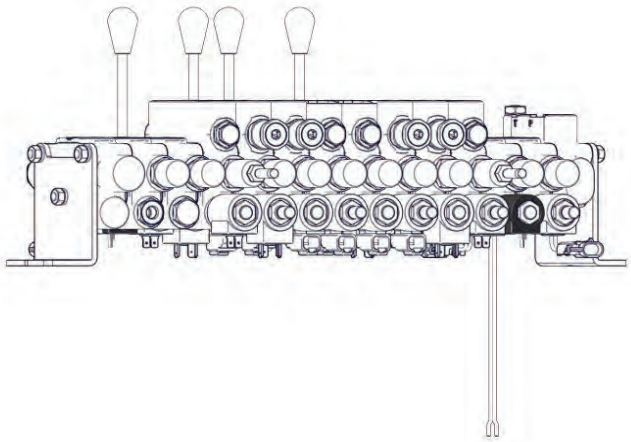

C504-00000……..…12 VDC coil with dual spade connector (SAE J858a).

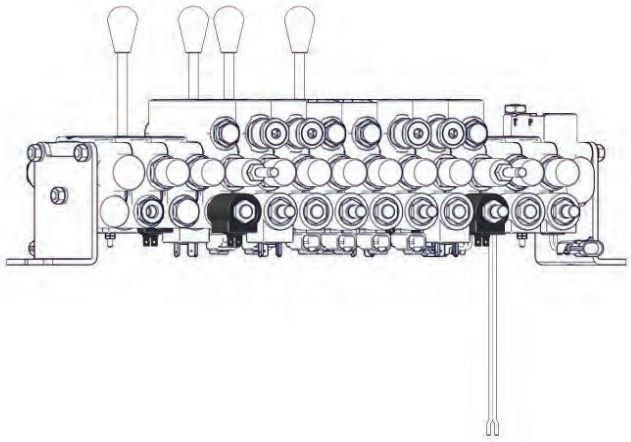

C506-00000……..12 VDC coil with DIN 43650 connector.
C601-00000……..…24 VDC coil with DIN 43650 connector.
C801-00000……..…115 VAC coil with DIN 43650 connector.

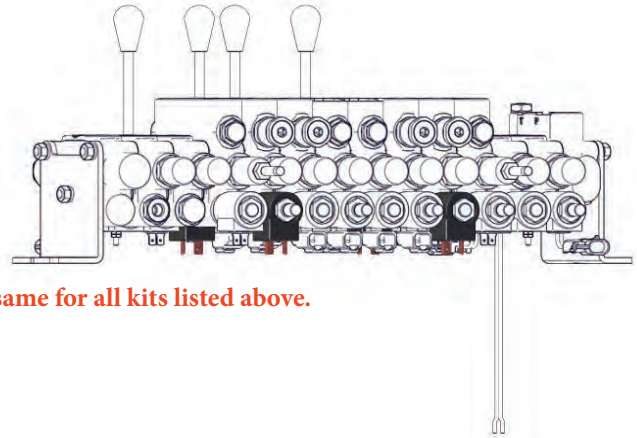

External dimensions are the same for all kits listed above.

SERIES 36 – COMPLETE LIST OF OPTIONS AND ACCESSORIES:

C513-00000……..12 VDC coil with Deutsch connector DT06-2S.

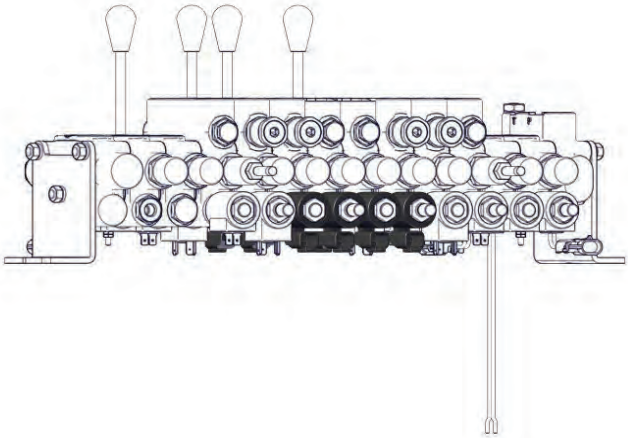

36-SCR……..…....Screens for cartridge.

36ABSP…….....Plug with seals, used to convert a center section to an end section.

36AM……..…....Manual override kind. (One end only)

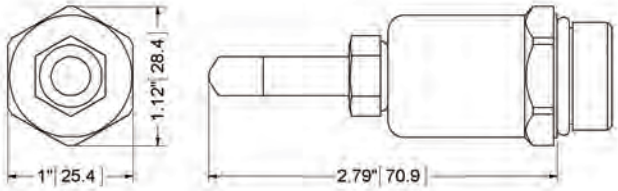

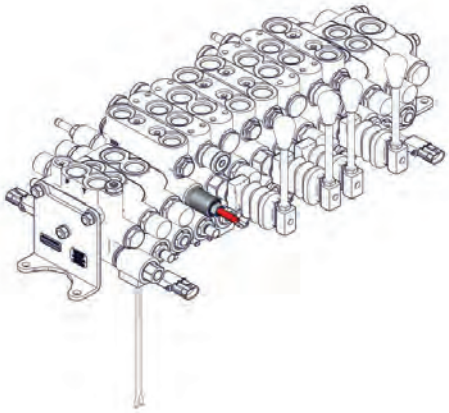

36BDB-W……....End section with #4 SAE pilot port.

36B_-NW….....Spool section with no wires in spool.

36BL1FY……...Single lock section with open spool.

Series 36 Electric Sectional Directional Control Valve

SERIES 36 – COMPLETE LIST OF OPTIONS AND ACCESSORIES:

36C10……..…...Combination differential port relief and anti-cavitation check, set at 1000 psi (69.0 bar), for spool section codes beginning 36BHF. (Available in pressure setting increments of 100 psi (6.9 bar), please specify desired setting as per this example)

36R10……..…....Area differential port relief, set at 1000 psi (69.0 bar), for spool section codes beginning 36BHF. (Available in pressure setting increments of 100 psi (6.9 bar), please specify desired setting as per this example)

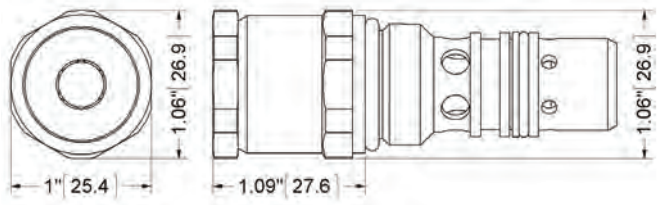

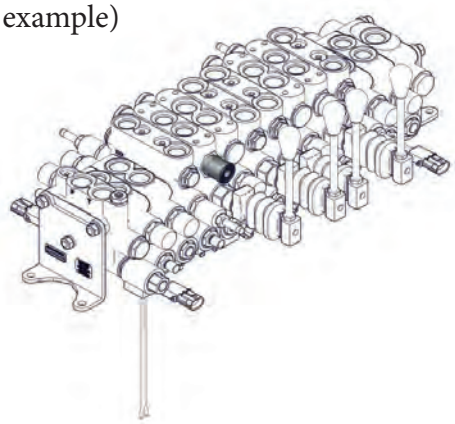

External dimensions are the same for all kits listed above.

36CP……..…....Solid plug for solenoid cartridge cavity.

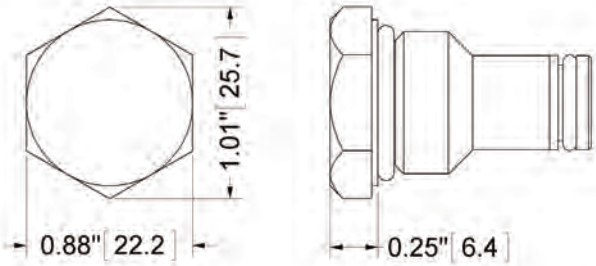

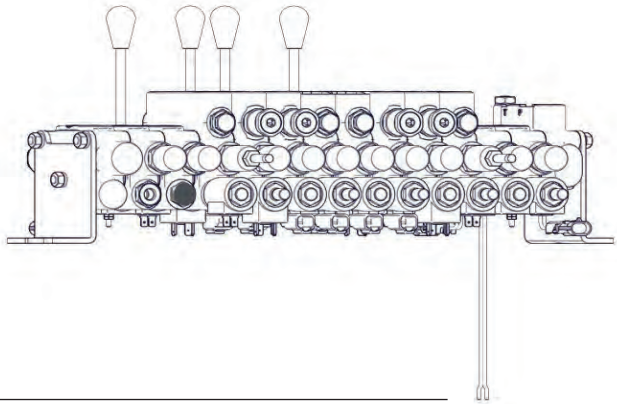

36CP-RP……..…..Pilot plug (for cartridge cavity) with drilled and tapped hole that allows the customer to shift the spool from a remote location.

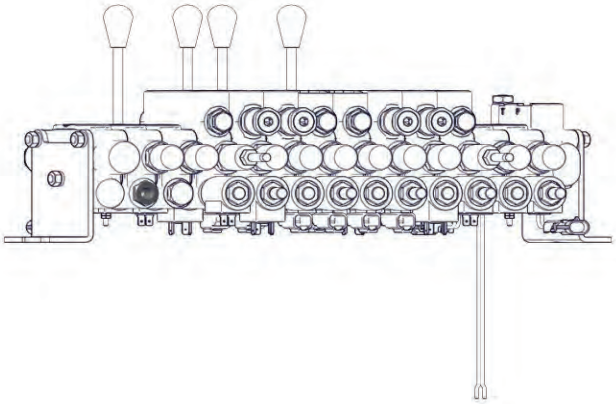

SERIES 36 – COMPLETE LIST OF OPTIONS AND ACCESSORIES:

36L2-K…….....Double lock kit with 4:1 ratio seat. (Valves shipped after 02/01/13)
36DL2-K……..…..Delrin double lock kit with 5:1 ratio seat. (Valves shipped before 02/01/13)
36DL2-KS…….....Steel double lock kit with 5:1 ratio seat. (Valves shipped before 02/01/13)

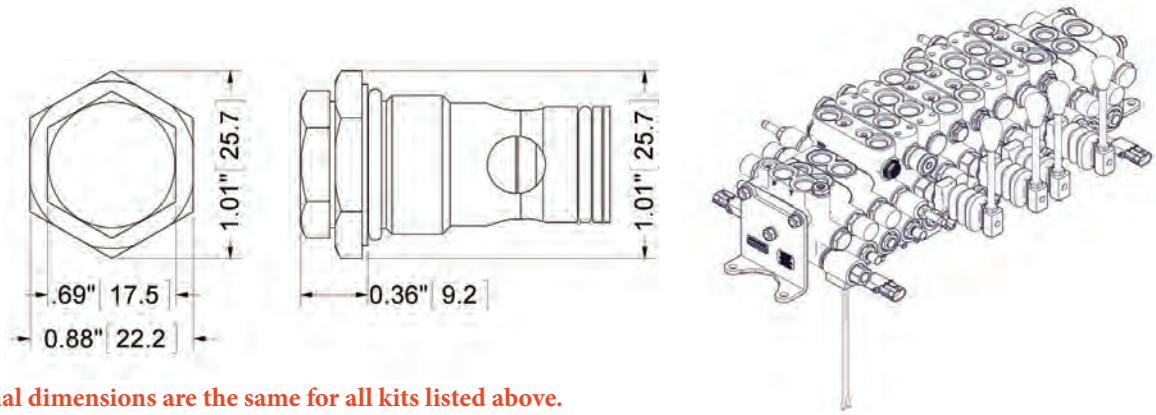

External dimensions are the same for all kits listed above.

36ME-X……..…....Handle assembly kit with (X) style spool. (Y spool also)
36ME-XL…….....Handle assembly kit with (X) style spool and light springs. (Y spool also)

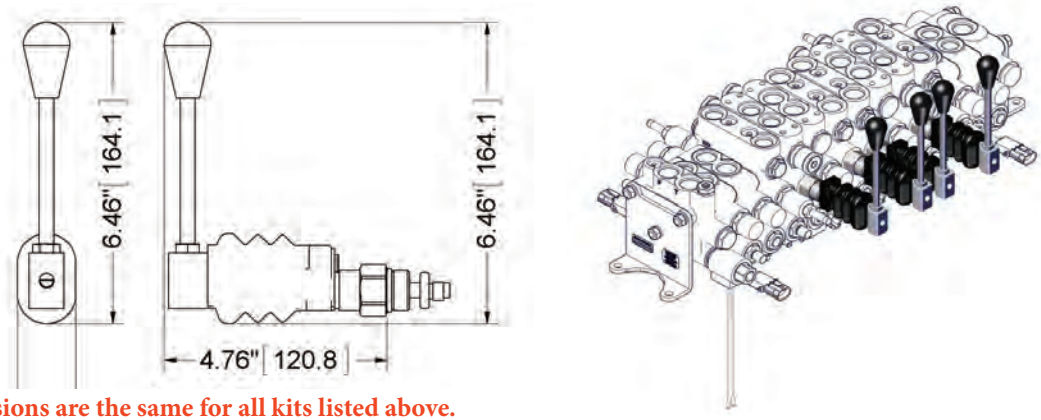

External dimensions are the same for all kits listed above.

36RP……....Port relief cavity plug for high section.

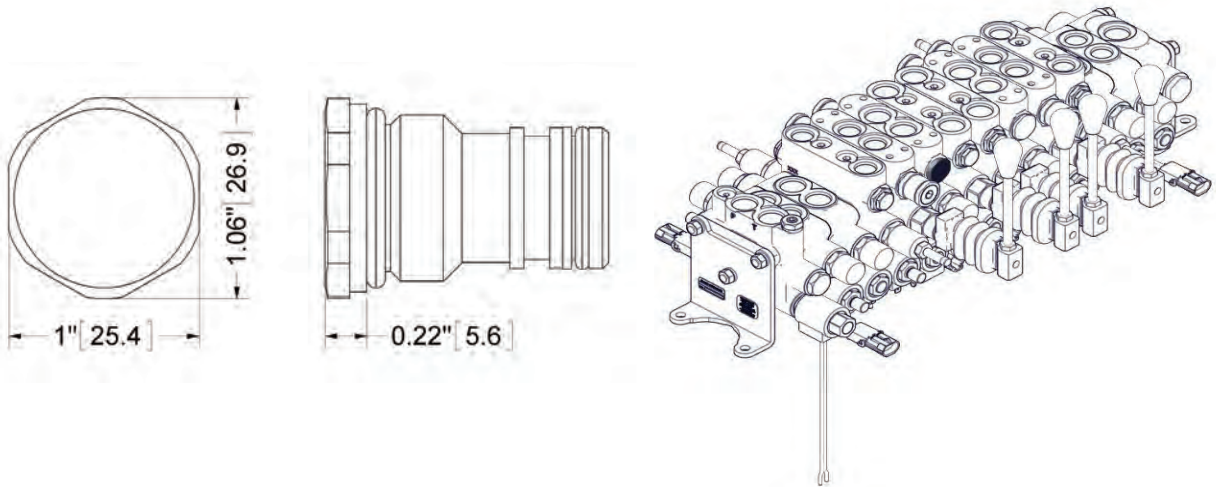

Series 36 Electric Sectional Directional Control Valve

SERIES 36 – COMPLETE LIST OF OPTIONS AND ACCESSORIES:

36TG1……..……...Outlet section for Series 36.

36TG2W……..…...Power beyond outlet section. This section must also have a N.O. cartridge. Inlet section does not require a N.O. cartridge when this power beyond section is used.

36TG2WA…...…..Power beyond outlet section for electric and manual control. This section must also have a N.O. cartridge. Inlet section does not require a N.O. cartridge when this power beyond section is used.

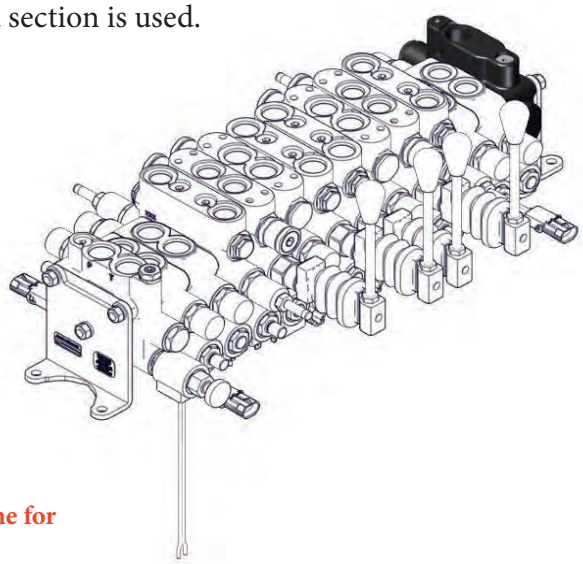

External dimensions are the same for all kits listed above.

36TR_……..…....Tie rod kits, specify number of spool sections in valve assembly, i.e. 3 spool sections in valve would read 36TR3.

ECM0001…….. ...Current Steering Module. Simplify wiring by replacing DPDT switches with SPDT switches.

Seal Kits:

36BHK…….....Seal kit for high section with relief.

36BK…….....Seal kit to rebuild between sections.

36BK-EM…….....Seal kit to rebuild between EM sections.

36BLK……..…..Seal kit for the body, locks and between the sections.

36PK……...…....Seal kit for inlet.

36RCB……..…….Seal kit for High lift ball spring relief (B), Combo. differ. port relief and anti cavitation check (C), and Area differ. port relief (R).

SERIES 36 – FLOW AND PRESSURE INFO:

Pressure VS. Flow for Inlet Relief

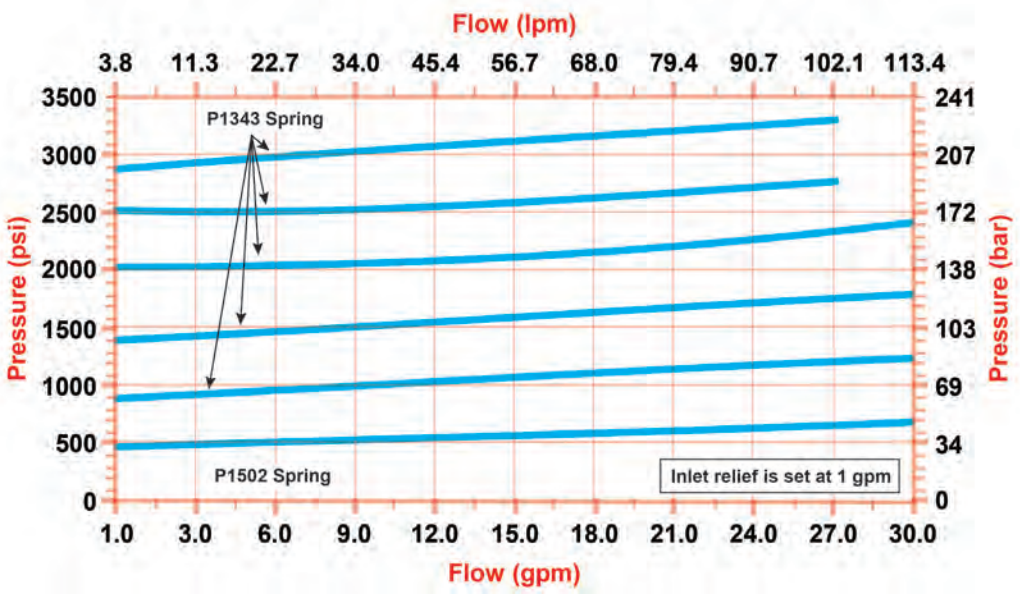

Pressure Drop VS. Flow for S36 Relief

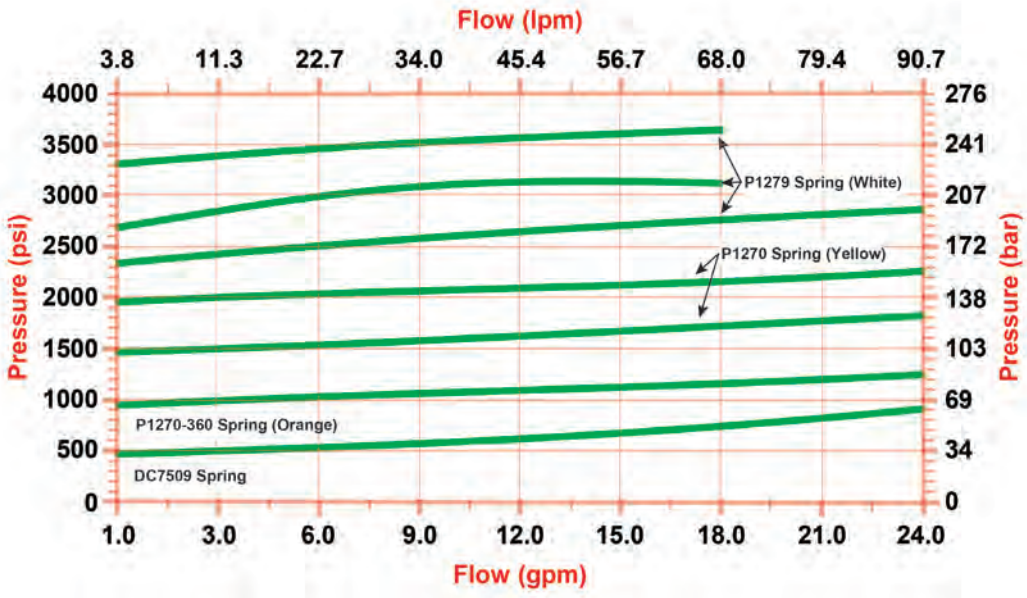

SERIES 36 – FLOW AND PRESSURE INFO:

Pressure Drop VS. Flow for Double Lock Section

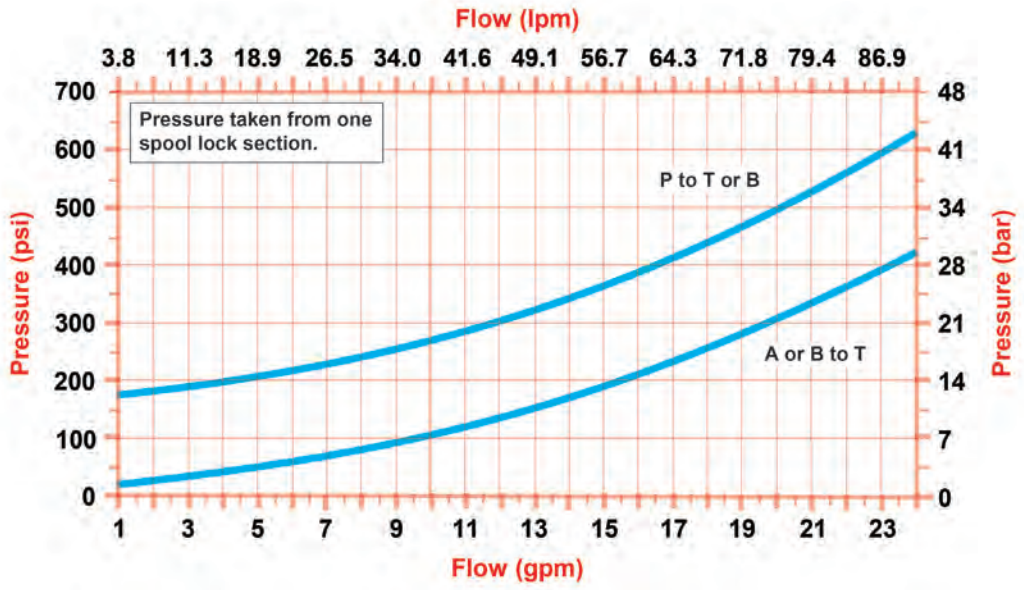

Pressure Drop VS. Flow for P to A or B

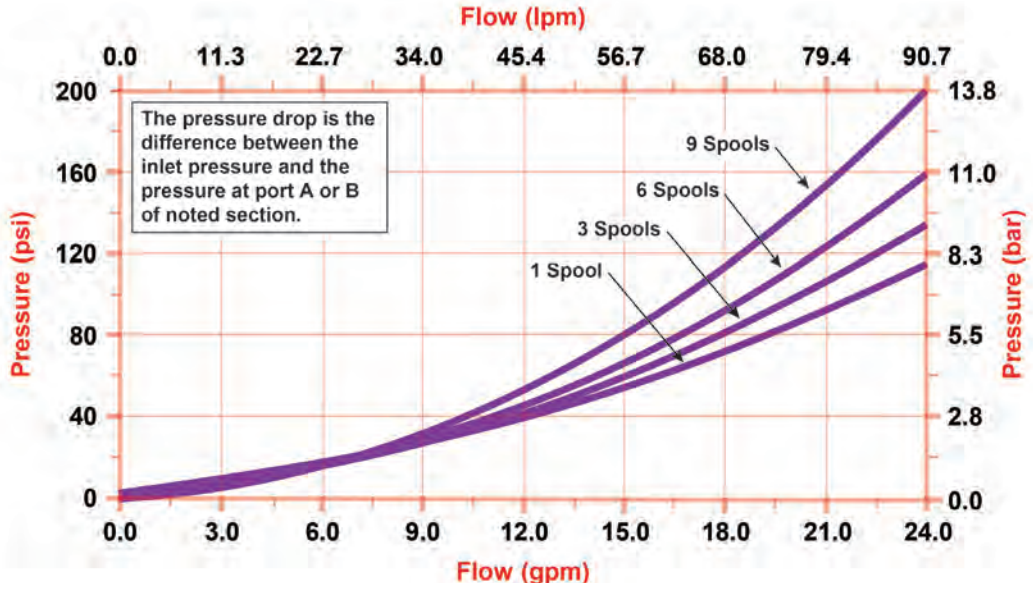

SERIES 36 – FLOW AND PRESSURE INFO:

Pressure Drop VS. Flow for A or B to T

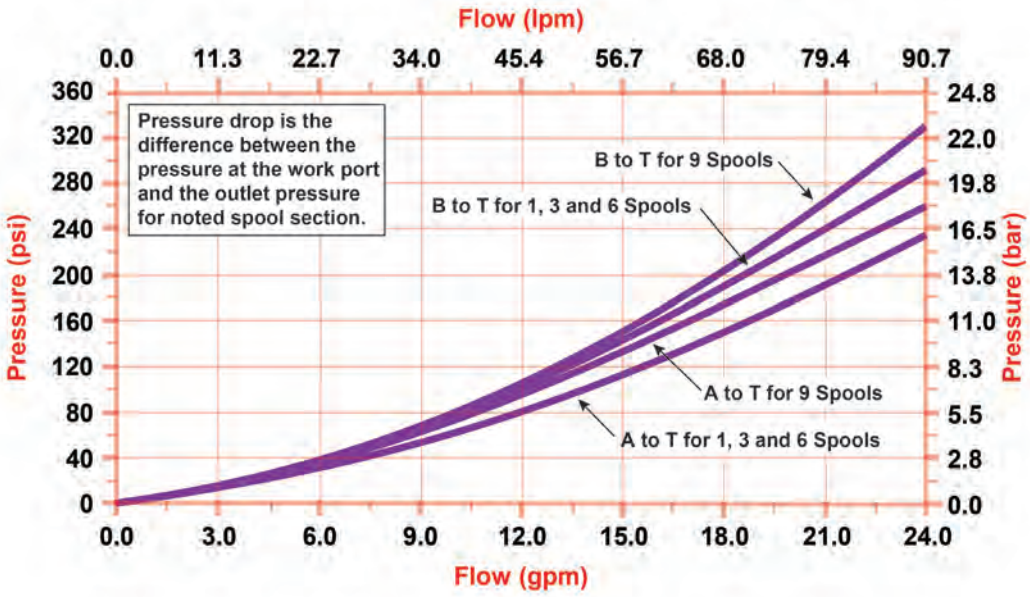

Neutral Flow Pressure Drop

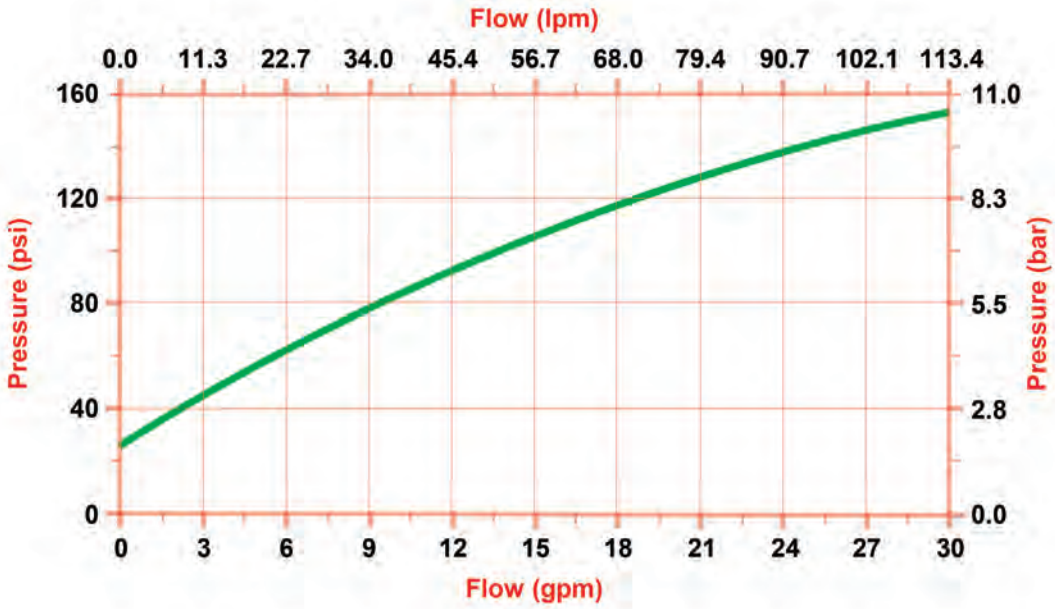

Series 36 Electric Sectional Directional Control Valve

DIMENSIONAL DATA: inches & [millimeters]

# OF SPOOLS	L
1	4.89” [124.2]
2	6.27” [159.1]
3	7.64” [194.0]
4	9.02” [229.0]
5	10.39” [263.9]
6	11.77” [298.8]
7	13.14” [333.8]
8	14.52” [368.7]
9	15.89” [403.6]
10	17.27” [438.5]
11	18.64” [473.5]
12	20.02” [508.4]

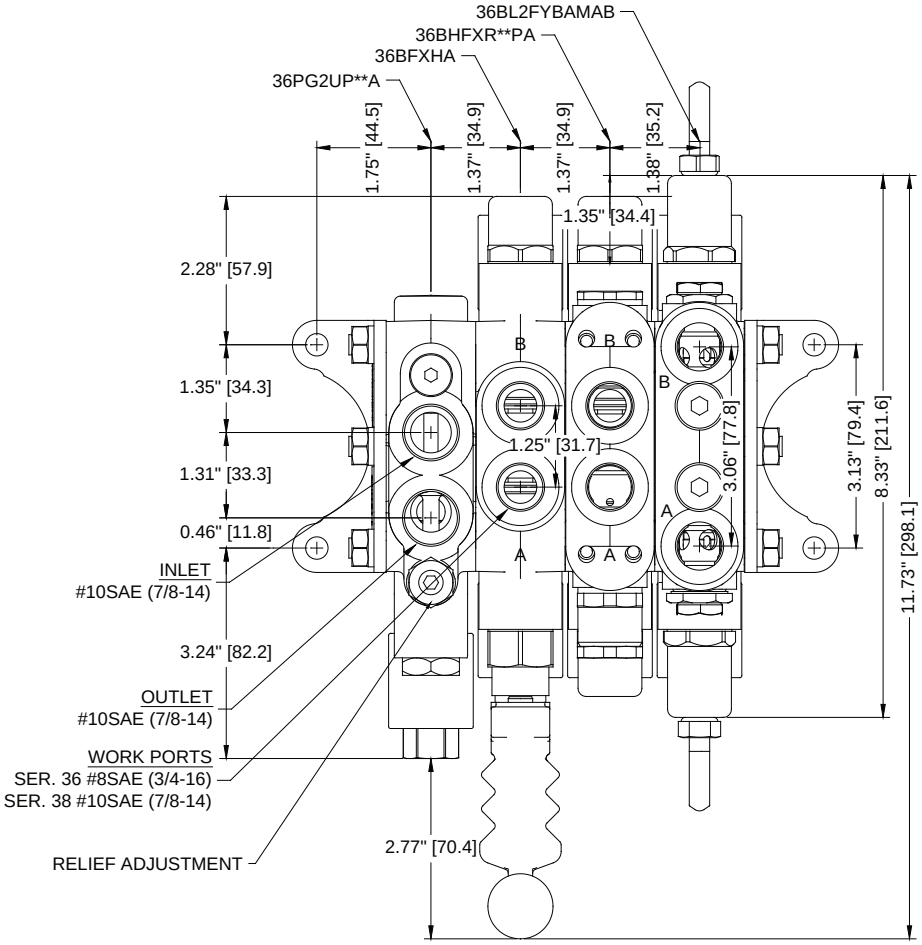

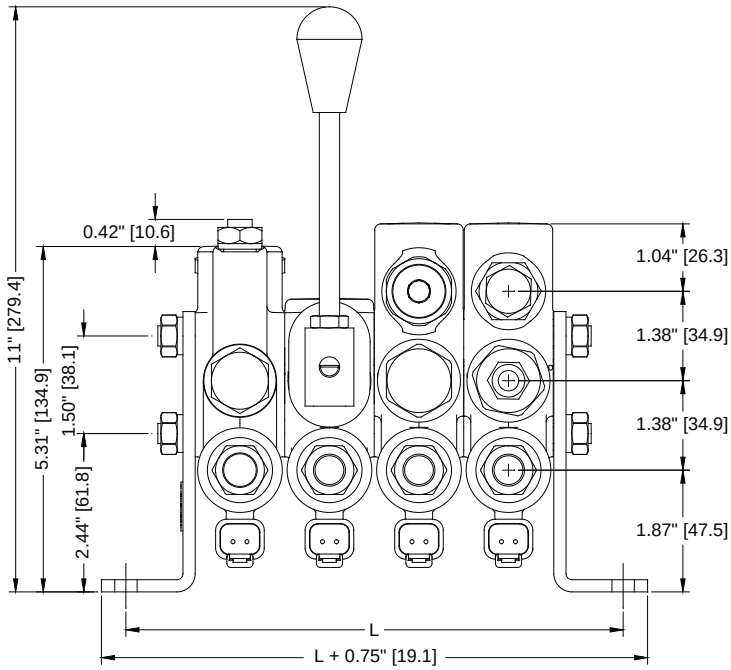

SERIES 36/38 SWITCH WIRING DIAGRAM:

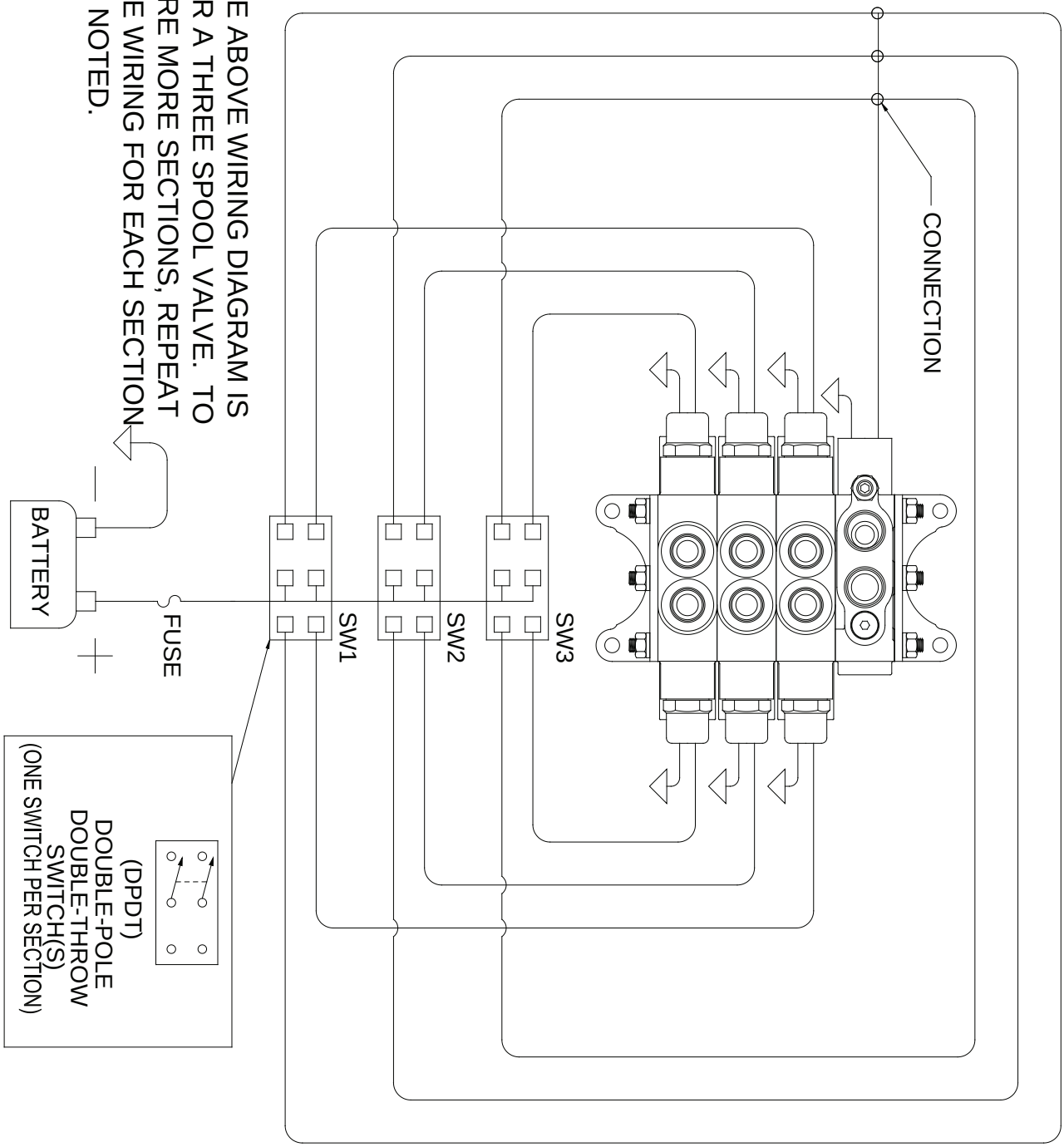

Series 36 Sectional Directional Control Valve

VALVE ASSEMBLY ARRANGEMENT:

			PRICE
	36A		
INLET/OUTLET	36PG2		
SPOOL #1	36B		
SPOOL #2	36B		
SPOOL #3	36B		
SPOOL #4	36B		
SPOOL #5	36B		
SPOOL #6	36B		
SPOOL #7	36B		
SPOOL #8	36B		
SPOOL #9	36B		
SPOOL #10	36B		
SPOOL #11	36B		
END SPOOL	36B		
N.C. CART.	C100		
N.C. CART.	C300		
COILS	C___		
TIE ROD	36TR		
(Torque to 85 inch lbs(9.6 N m))			
ASSEMBLY	36A	LIST	$

DISTRIBUTOR:_____

NAME:_____

EMAIL:_____ **PHONE:**_____

ADDRESS:_____

CITY:_____ **STATE:**_____ **ZIP:**_____ **DATE:**_____