General Information for Gear Motor Series

- Available is the following:

  UM 16 – Uni- (single) directional motor not designed for series operation

  M20 – Bi-directional, good for series operation

  TM20 – Bi-directional, good for series operation

  SPM20 – Bi-directional, good for series operation

  M25 – Bi-directional, good for series operation

  TM25 – Bi-directional, good for series operation

  SPM25 – Bi-directional, good for series operation

- Journal bearings for long life and good over-hung load capability
- Buna-N-Seals are standard for petroleum and glycol based fluids “Viton®E“ seals are optional.
- Pressure balanced plates for greater efficiency.

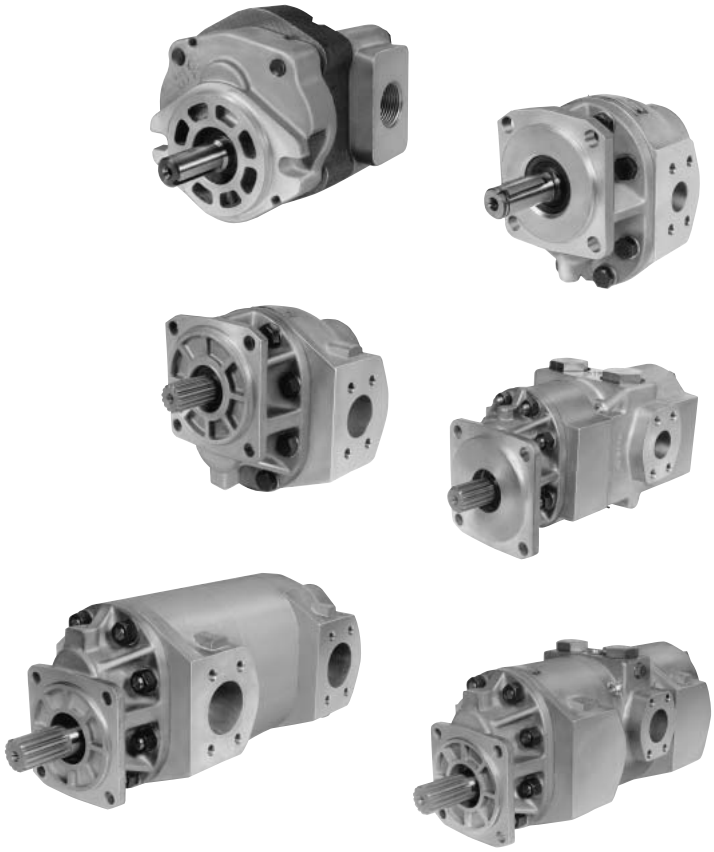

How to Order Gear Motor Series:

Select the desired symbol (in the correct position) to construct a model code.

Assembly Example:

[ ] [ ] 16 – [ ] – [ ] – [ ] – [ ] [ ] [ ]

Series | Section Size | Repeat tandem section | Rotation | Flange Options

OPTIONS	
Code	Description
V	Viton®

MODEL	
Code	Description
UM	Uni-directional Motor
M	Motor
TM	Tandem Motor
SPM	Series/Parrallel Motor

SERIES
Code
16
20
25

ROTATION	
Code	Direction
A	C'C' Wise
C	C' Wise
Note: M20, M25 TM25 and SPM25 leave blank for Bi-Rotational	

UM16 SECTION SIZE		
Code	Cu. In./ Rev.	CC's/ Rev.
45	.878	14.39
65	1.270	20.81
85	1.663	27.25
100	1.964	32.18
115	2.241	36.72
150	2.934	48.08
180	3.511	57.54
200	3.904	63.98

M20 / SPM20 SECTION SIZE		
Code	Cu. In./ Rev.	CC's/ Rev.
150	3.02	49.85
200	4.04	66.20
250	5.06	82.92
300	6.05	99.14
350	7.07	115.86
400	8.08	132.41
450	9.10	149.12

M25 / TM25 / SPM25 SECTION SIZE		
Code	Cu. In./ Rev.	CC's/ Rev.
550	11.06	181.94
660	13.42	219.91
770	15.50	254.00

UM16 SHAFT	
Code	Description
2	7/8" 13-Tooth Spline
5	7/8" Straight Keyed
6	3/4" Straight Keyed

M20 / SPM20 SHAFT	
Code	Description
1	1 1/4" 14-Tooth Spline
2	1" Straight Keyed
3	1 1/4" Straight Keyed
4	7/8" 13-Tooth Spline
5	1 1/4" Straight Keyed Long

M25 SHAFT	
Code	Description
1	1 1/4" 14-Tooth Spline
2	1 1/4" Straight Keyed
5	1 1/4" Straight Keyed Long

TM25 & SPM25 SHAFT	
Code	Description
1	1 1/4" 14-Tooth Spline
6	1 1/2" 17-Tooth Spline
7	1 1/2" Straight Keyed
8	1 1/2" Straight Keyed Long
9	1 1/2" 14-Tooth Spline

COVER PLATE (UM16 ONLY)			
Code	Port	Inlet	Outlet
1	Side	#16 SAE (1-5/16"-12UN-2B)	#20 SAE (1-5/8"-12UN-2B)
2	Rear	3/4" NPT	1" NPT
3	Side	3/4" SAE 4-Bolt	1-1/4" SAE 4-Bolt
4	Side	3/4" NPT	1" NPT
5	Side	#12 SAE (1-1/16"-12UN-2B)	#20 SAE (1-5/8"-12UN-2B)
6	Rear	#12 SAE (1-1/16"-12UN-2B)	#16 SAE (1-5/16"-12UN-2B)
7	Rear	3/4" BSPT	1" BSPT
8	Side	3/4" BSPT	1" BSPT
9	Side	#16 SAE (1-5/16"-12UN-2B)	#20 SAE (1-5/8"-12UN-2B)
10	Side/Rear	#12 SAE (1-1/16"-12UN-2B)	1-1/4" 4-Bolt
11	Side	#12 SAE (1-1/16"-12UN-2B)	1-1/4" 4-Bolt

UM16 FLANGE	
Code	Mounting
D	SAE 'A' 2-Bolt
E	6-Bolt Round
F	Pad (Foot) Mount
G	SAE 'C' 4-Bolt
J	SAE 'B' 4-Bolt
N	SAE 'B' 2-Bolt

M20 / SPM20 FLANGE	
Code	Mounting
D	SAE 'C' 4-Bolt
E	SAE 'B' 4-Bolt
F	SAE 'C' 2-Bolt
M	Pad (Foot) Mount
N	SAE 'B' 2-Bolt

M25 / TM25 / SPM25 FLANGE	
Code	Mounting
E	SAE 'C' 4-Bolt
F	SAE 'C' 2-Bolt

Specifications for UM16 Series

UM16 Features Include:

- Uni- (single) Rotation Motor Rotation must be specified.
- Motor does not have a bearing drain and is not suitable for series operation.
- Journal bearings for long life and good over-hung load capability
- Buna-N Seals are standards for petroleum and glycol based fluids "Viton®" seals are optional.
- Pressure balanced plates for greater efficiency.

Description ..... Gear Motors

Flow Range ..... To 42 GPM (158.9 LTR)

Displacements ..... To 3.90 C.I.R. (63.98 CC's/REV.)

Maximum Pressure to ..... 3000 PSI (207 BAR)

Maximum Speed to ..... 3600 RPM

Rotation ..... Uni-(Single) Direction

Bearings ..... Journal

Construction ..... Aluminum Flange & Cover
..... with Cast Iron Gear Section

Performance Data

MOTOR MODELS	DISPLACEMENT/REVOLUTION (THEORETICAL)					TORQUE PER 1000 PSID*				POWER AT MAX. RPM/MAX.PSID*		MAXIMUM LIMITS				
						START		RUN				RELIEF SETTING		CONTINUOUS PRESSURE		SPEED
	US GALLONS	CUBIC INCHES	LITERS	CUBIC CM'S	IMPERIAL GALLONS	LB.IN.	NM	LB.IN.	NM	H.P.	KW	PSI	BAR	PSI	BAR	RPM
UM16 - 45	0.0038	0.878	0.014	14.39	0.003	108	146	125	169	21	15.6	3000	207	1700	117	3600
UM16 - 65	0.0055	1.270	0.021	20.81	0.005	156	211	181	245	30	22.4	3000	207	1700	117	3600
UM16 - 85	0.0072	1.663	0.027	27.25	0.006	205	277	236	319	38	28.3	3000	207	1700	117	3400
UM16 - 100	0.0085	1.964	0.032	32.18	0.007	241	326	279	378	43	32.1	3000	207	1700	117	3300
UM16 - 115	0.0097	2.241	0.037	36.72	0.008	276	374	318	431	47	35.0	3000	207	1700	117	3100
UM16 - 150	0.0127	2.934	0.048	48.08	0.011	361	489	417	565	55	41.0	3000	207	1700	117	2800
UM16 - 180	0.0152	3.511	0.058	57.54	0.013	432	585	499	676	59	44.0	2200	152	1700	117	2500
UM16 - 200	0.0169	3.904	0.064	63.98	0.014	480	651	555	752	66	49.2	2000	138	1700	117	2500

Notes: (1) All data based on SAE 10W Oil at 135°F. (2) All motors are available with Viton® Seals.
*Average valves from performance curves.

CAUTION: UM16 motors do not have an external bearing drain. Return line pressure must not exceed 20 PSIG.

MOUNTING DIMENSIONS								
MOTOR MODEL	FLANGE TYPE						SHIPPING WEIGHTS	
	D		E		F			
	A	B	A	B	A	B	LBS.	KGS.
UM16-45	89.9 (3.54)	115.6 (4.55)	118.4 (4.66)	144.1 (5.67)	92.9 (3.66)	118.6 (4.67)	8	3.5
UM16-65	95.3 (3.75)	121.2 (4.77)	123.6 (4.88)	149.6 (5.89)	98.6 (3.88)	124.2 (4.89)	8	3.5
UM16-85	100.9 (3.97)	126.5 (4.98)	129.3 (5.09)	154.9 (6.10)	103.9 (4.09)	129.5 (5.10)	8	3.5
UM16-100	104.9 (4.13)	130.6 (5.14)	133.3 (5.25)	159.0 (6.26)	107.9 (4.25)	133.6 (5.26)	9	4.0
UM16-115	108.9 (4.29)	134.6 (5.30)	137.4 (5.41)	163.1 (6.42)	112.0 (4.41)	137.7 (5.42)	9	4.0
UM16-150	118.4 (4.66)	144.1 (5.67)	146.8 (5.78)	172.5 (6.79)	121.4 (4.78)	147.1 (5.79)	9	4.0
UM16-180	126.5 (4.98)	152.2 (5.99)	154.9 (6.10)	180.6 (7.11)	129.5 (5.10)	155.2 (6.11)	10	4.5
UM16-200	131.8 (5.19)	157.5 (6.20)	160.3 (6.31)	185.9 (7.32)	134.9 (5.31)	160.5 (6.32)	10	4.5

MOUNTING DIMENSIONS								
MOTOR MODEL	FLANGE TYPE						SHIPPING WEIGHTS	
	J		N		S			
	A	B	A	B	A	B	LBS.	KGS.
UM16-45	118.4 (4.66)	144.1 (5.67)	86.9 (3.42)	112.5 (4.43)	132.6 (5.22)	158.2 (6.23)	8	3.5
UM16-65	123.6 (4.88)	149.6 (5.89)	92.2 (3.63)	118.1 (4.65)	138.2 (5.44)	163.8 (6.45)	8	3.5
UM16-85	129.3 (5.09)	154.9 (6.10)	97.8 (3.85)	123.4 (4.86)	143.5 (5.65)	169.2 (6.66)	8	3.5
UM16-100	133.3 (5.25)	159.0 (6.26)	101.8 (4.01)	127.5 (5.02)	147.6 (5.81)	173.2 (6.82)	9	4.0
UM16-115	137.4 (5.41)	163.1 (6.42)	105.9 (4.17)	131.6 (5.18)	151.6 (5.97)	177.3 (6.98)	9	4.0
UM16-150	146.8 (5.78)	172.5 (6.79)	115.3 (4.54)	140.9 (5.55)	161.0 (6.34)	186.7 (7.35)	9	4.0
UM16-180	154.9 (6.10)	180.6 (7.11)	123.4 (4.86)	149.1 (5.87)	169.2 (6.66)	194.8 (7.67)	10	4.5
UM16-200	160.3 (6.31)	185.9 (7.32)	128.8 (5.07)	154.4 (6.08)	174.5 (6.87)	200.1 (7.88)	10	4.5

C DIMENSIONS		
FLANGE TYPE	MM	IN
D	6.35	(.250)
E	4.74	(.187)
F	—	—
G	6.35	(.250)
J	6.35	(.250)
N	9.52	(.375)
S	5.08	(.200)

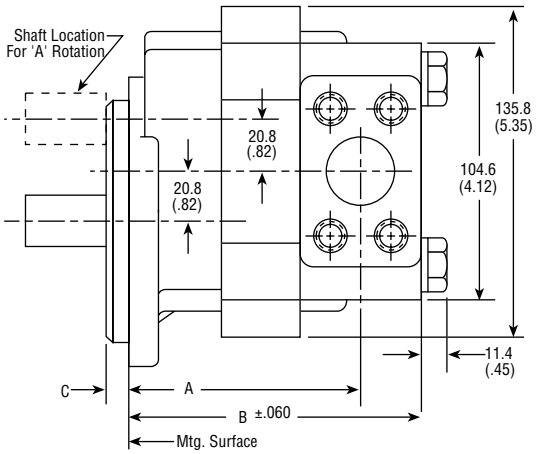

Inch equivalents for millimeter dimensions are shown in (**).

Specifications for M20 Series

M20 Features Include:

- Bearing drain is standard and allows operation in series circuits.
- Journal bearings for long life and good over-hung load capability
- Buna-N Seals are standards for petroleum and glycol based fluids "Viton®E" seals are optional.
- Pressure balanced plates for greater efficiency.

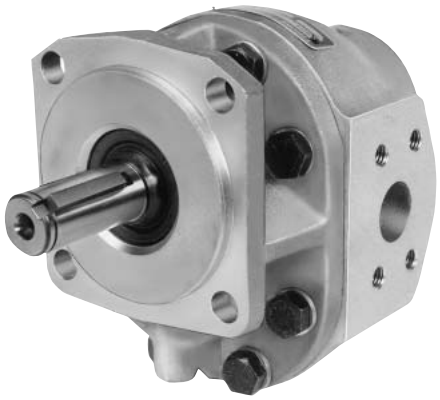

Description ..... Gear Motors

Flow Range ..... To 98 GPM (370.9 LTR)

Displacements ..... To 9.10 C.I.R. (149.12 cc's / rev.)

Maximum Pressure to ..... 2500 PSI (172 BAR)

Maximum Speed to ..... 2500 RPM

Rotation ..... Bi-Directional

Bearings ..... Journal

Construction ..... Aluminum

Performance Data

MOTOR MODELS	DISPLACEMENT/REVOLUTION (THEORETICAL)					TORQUE PER 1000 PSID*				POWER AT MAX. RPM/MAX.PSID*		MAXIMUM LIMITS				
						START		RUN				RELIEF SETTING		CONTINUOUS PRESSURE		SPEED
	US GALLONS	CUBIC INCHES	LITERS	CUBIC CM'S	IMPERIAL GALLONS	LB.IN.	NM	LB.IN.	NM	H.P.	KW	PSI	BAR	PSI	BAR	RPM
M20150	.0131	3.02	.050	49.85	.011	272	368	400	542	38	28.3	2500	172	1700	117	2500
M20200	.0175	4.04	.066	66.20	.015	384	520	588	797	50	37.3	2500	172	1700	117	2500
M20250	.0219	5.06	.083	82.92	.018	496	672	720	976	64	47.7	2500	172	1700	117	2500
M20300	.0262	6.05	.099	99.14	.022	608	824	880	1193	74	55.2	2500	172	1700	117	2500
M20350	.0306	7.07	.116	115.86	.025	720	976	1000	1355	90	67.1	2500	172	1700	117	2500
M20400	.0350	8.08	.133	132.41	.029	820	1111	1120	1518	105	78.3	2500	172	1700	117	2500
M20450	.0394	9.10	.149	149.12	.033	940	1274	1340	1816	124	92.5	2500	172	1700	117	2500

*Average values from performance curves.
Available with Viton® Seals. All data based on SAE 10W oil at 135°F.

CAUTION: "If return line pressure exceeds 150 PSIG, the external bearing drain must be used.

MOTOR MODEL	For 'C' 2-Bolt & 'B' & 'C' 4-Bolt Flg.		SAE 4-BOLT CONN. PORT				Shipping Weights	
			Inlet		Outlet			
	A	B	Conn. Sz.	Hole Dia.	Conn. Sz.	Hole Dia.	lbs.	kgs.
M20150	104.6 (4.12)	167.8 (6.61)	1"	25.4 (1.00)	1"	25.4 (1.00)	19	8.62
M20200	104.6 (4.12)	167.8 (6.61)	1"	25.4 (1.00)	1"	25.4 (1.00)	20	9.07
M20250	104.6 (4.12)	167.8 (6.61)	1-1/4"	30.2 (1.25)	1-1/4"	30.2 (1.25)	21	9.53
M20300	104.6 (4.12)	167.8 (6.61)	1-1/4"	30.2 (1.25)	1-1/4"	30.2 (1.25)	22	9.98
M20350	110.4 (4.35)	182.3 (7.18)	1-1/2"	38.1 (1.50)	1-1/2"	38.1 (1.50)	23	10.4
M20400	110.4 (4.35)	189.7 (7.47)	1-1/2"	38.1 (1.50)	1-1/2"	38.1 (1.50)	24	10.9
M20450	118.3 (4.66)	196.8 (7.75)	1-1/2"	38.1 (1.50)	1-1/2"	38.1 (1.50)	25	11.3

SAE 4-Bolt Connector Ports					
Size	C	D	E	F	G
1"	12.9 (.51)	26.1 (1.031)	26.1 (1.03)	52.3 (2.062)	3/8-16NC
1-1/4"	14.9 (.59)	30.1 (1.188)	29.2 (1.15)	58.7 (2.313)	7/16-14NC
1-1/2"	17.7 (.70)	35.7 (1.406)	34.7 (1.37)	69.8 (2.750)	1/2-13NC

Inch equivalents for millimeter dimensions are shown in (**).

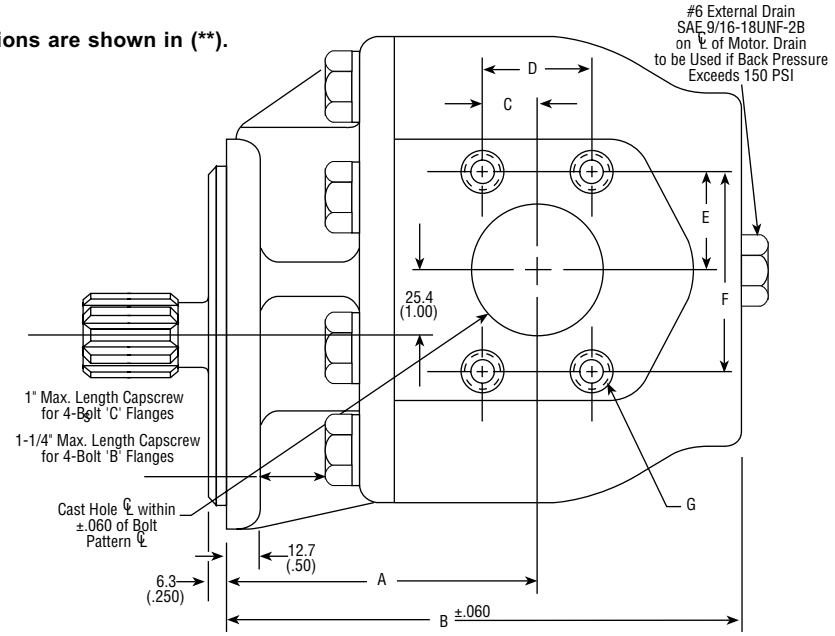

Parker Hannifin Corporation
Gear Pump Division
Youngstown, Ohio USA

Specifications for SPM20 Series

SPM20 Features Include:

- Tandem motor with valving to provide two-speed operation on constant input flow
- Journal bearings for long life and good over-hung load capability
- Buna-N Seals are standards for petroleum and glycol based fluids "Viton®E" seals are optional.
- Pressure balanced plates for greater efficiency.

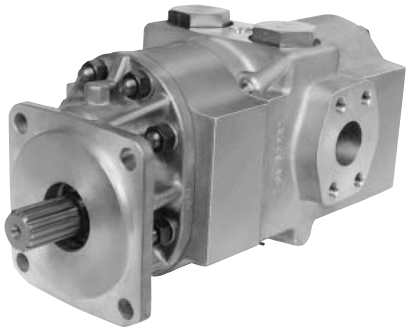

Description ..... Two-Speed Gear Motors

Flow Range ..... To 98 GPM Per Section (370.9 LTR)

Displacements ..... To 9.10 C.I.R. Per Section (149.12 cc's/rev.)

Maximum Pressure to ..... 2500 PSI (172 BAR)

Maximum Speed to ..... 2500 RPM

Rotation ..... Bi-Directional

Bearings ..... Journal

Construction ..... Aluminum

Tandem Motor With Valving To Provide Two-Speed Operation On Constant Input Flow

Parker two-speed motors consist of two hydraulic motor units and pilot operated valving. From this unique unit either high speed or high torque can be obtained, thereby improving the efficiency of winch drives, track drives, and hydrostatic transmissions. Main features of these units are: no external pilot pressure source is necessary, shift to different speed is extremely smooth; and the motor will not hesitate during shift. Displacement of the two motors need not be equal. It utilizes one inlet and one outlet and is fully reversible.

The two motor sections are connected through valving to the common inlet/outlet ports. For low-speed, high-torque output, the pilot port is vented to the tank. For higher-speed, lower torque,the pilot port is blocked, causing the internal valves to shift to the closed position, routing the total flow through the rear motor section. The front motor section receives lubrication oil through the valve section, and requires very little horsepower in this position, since it is only recirculating the fluid.

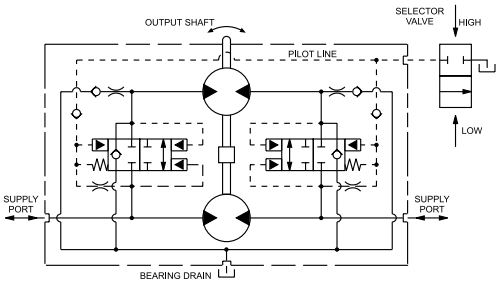

Inch equivalents for millimeter dimensions are shown in (**).

Performance Data Per Section

MOTOR MODELS	DISPLACEMENT/REVOLUTION(THEORETICAL)					TORQUE PER 1000 PSID*				POWER AT MAX. RPM/MAX.PSID*		MAXIMUM LIMITS				
						START		RUN				RELIEF SETTING		CONTINUOUS PRESSURE		SPEED
	US GALLONS	CUBIC INCHES	LITERS	CUBIC CM'S	IMPERIAL GALLONS	LB.IN.	NM	LB.IN.	NM	H.P.	KW	PSI	BAR	PSI	BAR	RPM
SPM20150	.0131	3.02	.050	49.85	.011	272	368	400	542	38	28.3	2500	172	1700	117	2500
SPM20200	.0175	4.04	.066	66.20	.015	384	520	588	797	50	37.3	2500	172	1700	117	2500
SPM20250	.0219	5.06	.083	82.92	.018	496	672	720	976	64	47.7	2500	172	1700	117	2500
SPM20300	.0262	6.05	.099	99.14	.022	608	824	880	1193	74	55.2	2500	172	1700	117	2500
SPM20350	.0306	7.07	.116	115.86	.025	720	976	1000	1355	90	67.1	2500	172	1700	117	2500
SPM20400	.0350	8.08	.133	132.41	.029	820	1111	1120	1518	105	78.3	2500	172	1700	117	2500
SPM20450	.0394	9.10	.149	149.12	.033	940	1274	1340	1816	124	92.5	2500	172	1700	117	2500

*Average values from performance curves.
Available with Viton® Seals. All data based on SAE 10W oil at 135°F.

CAUTION: Bearing drain line must not exceed 20 PSIG.

MOUNTING DIMENSIONS		
MOTOR SIZES	**A**	**B**
SPM20150-150	203.9 (8.03)	322.0 (12.68)
SPM20200-200	226.8 (8.93)	366.5 (14.43)
SPM20250-250	233.9 (9.21)	383.7 (15.11)
SPM20300-300	241.0 (9.49)	398.0 (15.67)
SPM20350-350	248.4 (9.78)	395.4 (15.57)
SPM25400-400	255.5 (10.06)	409.7 (16.13)
SPM20450-450	262.8 (10.35)	424.4 (16.71)

SAE 4-Bolt Connector Ports					
Size	**C**	**D**	**E**	**F**	**G**
1-1/2"	17.7 (.70)	35.7 (1.406)	34.7 (1.37)	69.8 (2.750)	1/2-13NC

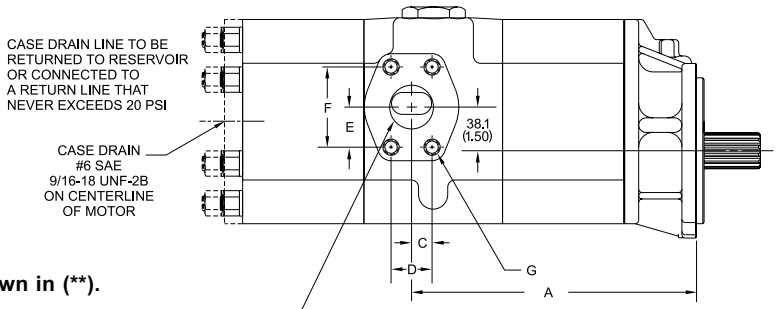

Inch equivalents for millimeter dimensions are shown in (**).

SAE 4-Bolt NPT Connectors are available. See Accessory Section.

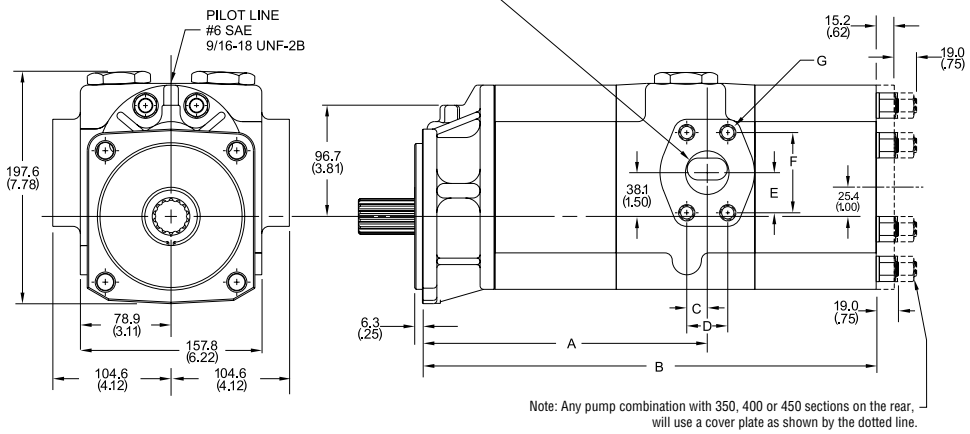

Note: Any pump combination with 350, 400 or 450 sections on the rear, will use a cover plate as shown by the dotted line.

Specifications for M25 Series

M25 Features Include:

- Bearing Drain is standard and allows operation in series circuits
- Journal bearings for long life and good over-hung load capability
- Buna-N Seals are standards for petroleum and glycol based fluids “Viton®E” seals are optional.
- Pressure balanced plates for greater efficiency.

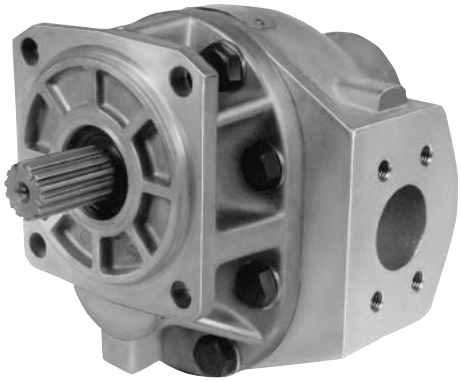

Description ..... Gear Motors

Flow Range ..... To 166 GPM (628.3 LTR.)

Displacements ..... To 19.22 C.I.R. (314.96 CC’s/REV.)

Maximum Pressure to ..... 2500 PSI (172 BAR)

Maximum Speed to ..... 2000 RPM

Rotation ..... Bi-Directional

Bearings ..... Journal

Construction ..... Aluminum

Performance Data

MOTOR MODELS	DISPLACEMENT/REVOLUTION(THEORETICAL)					TORQUE PER 1000 PSID*				POWER AT MAX. RPM/MAX.PSID*		MAXIMUM LIMITS				
						START		RUN				RELIEF SETTING		CONTINUOUS PRESSURE		SPEED
	US GALLONS	CUBIC INCHES	LITERS	CUBIC CM’S	IMPERIAL GALLONS	LB.IN.	NM	LB.IN.	NM	H.P.	KW	PSI	BAR	PSI	BAR	RPM
M25550	.0479	11.06	.181	181.24	.040	1400	1898	1600	2169	122	91.0	2500	172	1700	117	2000
M25660	.0581	13.42	.220	219.91	.048	1760	2386	1960	2657	146	109.0	2500	172	1700	117	2000
M25770	.0671	15.50	.254	254.00	.056	1820	2467	2200	1629	168	125.3	2500	172	1700	117	2000
M25950	.0832	19.22	.315	314.96	.069	2295	3111	2818	1873	187	139.4	2200	152	1700	117	2000

All data based on SAE 10W oil at 135°F. Available with Viton® .
*Average values from performance curves. **At 2200 PSI.

CAUTION: If return line pressure exceeds 150 PSIG, the external bearing drain must be used.

MOUNTING DIMENSIONS						
	For 'C' 2-Bolt & 'B' & 'C' 4-Bolt Flg.		SAE 4-Bolt Conn. Port		Shipping Weights	
Motor Model	A	B	Inlet	Outlet	lbs.	kgs.
M20550	128.5 (5.06)	223.7 (8.81)	2"	2"	45	20.41
M20660	134.8 (5.31)	230.1 (9.06)	2"	2"	46	20.87
M20770	141.2 (5.56)	236.4 (9.31)	2"	2"	48	21.77
M20950	157.7 (6.21)	252.7 (9.95)	2"	2"	49	22.23

SAE 4-Bolt Connector Ports					
Size	C	D	E	F	G
2"	21.3 (.84)	42.8 (1.688)	38.8 (1.53)	77.7 (3.062)	1/2-13NC

Inch equivalents for millimeter dimensions are shown in (**).

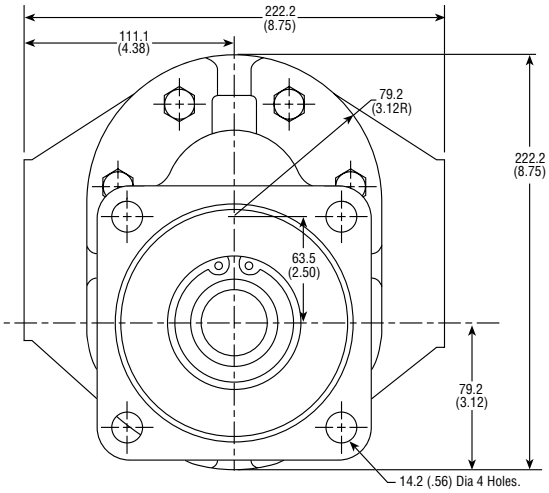

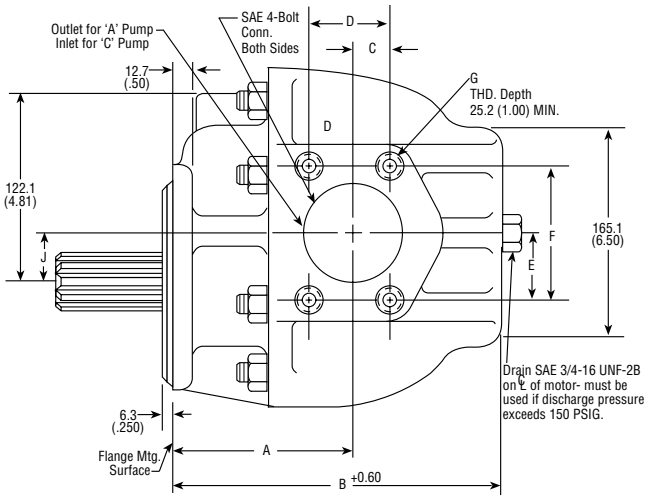

SAE 4-Bolt NPT Connectors are available. See Accessory Section

Specifications for TM25 Series

TM25 Features Include:

- Bearing drain is standard and allows operation in series circuits
- Journal bearings for long life and good over-hung load capability
- Buna-N Seals are standards for petroleum and glycol based fluids "Viton®E" seals are optional.
- Pressure balanced plates for greater efficiency.

Description ..... Gear Motors
Flow Range ..... To 134 GPM Per Section (507.2 LTR.)
Displacements ..... To 15.50 C.I.R. Per Section (254.00 CC's/REV.)
Maximum Pressure to ..... 2500 PSI (172 BAR)
Maximum Speed to ..... 2000 RPM
Rotation ..... Bi-Directional
Bearings ..... Journal
Construction ..... Aluminum

Performance Data Per Section

MOTOR MODELS	DISPLACEMENT/REVOLUTION(THEORETICAL)					TORQUE PER 1000 PSID*				POWER AT MAX. RPM/MAX.PSID*		MAXIMUM LIMITS				
						START		RUN				RELIEF SETTING		CONTINUOUS PRESSURE		SPEED
	US GALLONS	CUBIC INCHES	LITERS	CUBIC CM'S	IMPERIAL GALLONS	LB.IN.	NM	LB.IN.	NM	H.P.	KW	PSI	BAR	PSI	BAR	RPM
TM25550	.0479	11.06	.181	181.24	.040	1400	1898	1600	2169	122	91.0	2500	172	1700	117	2000
TM25660	.0581	13.42	.220	219.91	.048	1760	2386	1960	2657	146	109.0	2500	172	1700	117	2000
TM25770	.0671	15.50	.254	254.00	.056	1820	2467	2200	1629	168	125.3	2500	172	1700	117	2000

All data based on SAE 10W oil at 135°F.*Average values from performance curves.

CAUTION: If return line pressure exceeds 150 PSIG, the external bearing drain must be used.

MOUNTING DIMENSIONS					
	For 'C' 2-Bolt & 'C' 4-Bolt Flg.			SAE 4-Bolt Conn. Port	
PUMP SIZE	A	B	C	Inlet	Outlet
TM25550-550	128.5 (5.06)	376.1 (14.81)	471.4 (18.56)	2"	2"
TM25660-550	137.9 (5.43)	386.8 (15.23)	482.0 (18.98)	2"	2"
TM25660-660	137.9 (5.43)	393.1 (15.48)	488.4 (19.23)	2"	2"
TM25770-550	147.5 (5.81)	396.2 (15.60)	491.4 (19.35)	2"	2"
TM25770-660	147.5 (5.81)	402.5 (15.85)	497.8 (19.60)	2"	2"
TM25770-770	147.5 (5.81)	408.9 (16.10)	504.1 (19.85)	2"	2"

SAE 4-Bolt Connector Ports					
Size	D	E	F	G	H
2"	21.3 (.84)	42.8 (1.688)	38.8 (1.53)	77.7 (3.062)	1/2-13NC

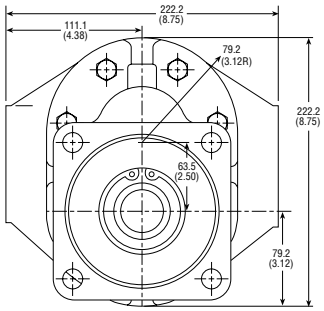

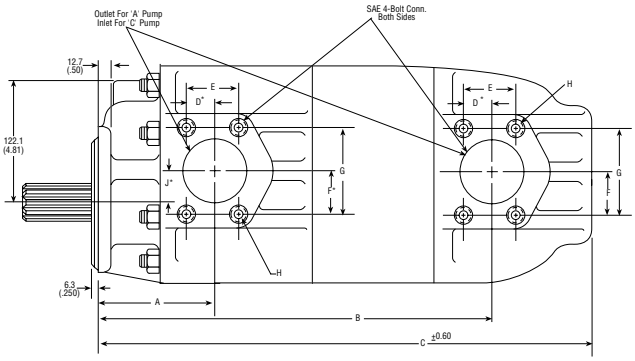

Inch equivalents for millimeter dimensions are shown in (**).

Parker Hannifin Corporation
Gear Pump Division
Youngstown, Ohio USA

Specifications for SPM25 Series

SPM25 Features Include:

- Tandem motor with valving to provide two-speed operation on constant input flow
- Journal bearings for long life and good over-hung load capability
- Buna-N Seals are standards for petroleum and glycol based fluids "Viton®E" seals are optional.
- Pressure balanced plates for greater efficiency.

Description ..... Two-Speed Gear Motors

Flow Range ..... To 134 GPM (507.2 LTR) per Section

Displacements ..... To 15.50 CIR. (240 CC's/REV.) per Section

Maximum Pressure to ..... 2500 PSI (172 BAR)

Maximum Speed to ..... 2000 RPM

Rotation ..... Bi-Directional

Bearings ..... Journal

Construction ..... Aluminum

Tandem Motor With Valving To Provide Two-Speed Operation On Constant Input Flow

Parker two-speed motors consist of two hydraulic motor units and pilot-operated valving. From this unique unit either high-speed or high torque can be obtained, thereby improving the efficiency of winch drives, track drives, and hydrostatic transmissions. Main features of these units are: no external pilot pressure source is necessary, shifting to different speed is extremely smooth; the motor will not hesitate during shift. Displacement of the two motors need not be equal. It utilizes one inlet and one outlet, and is fully reversible.

The two, motor sections are connected through valving to the common inlet/outlet ports. For low-speed, high-torque output, the pilot port is vented to tank. For higher speed, lower torque, the pilot port is blocked, causing the internal valves to shift to the closed position, routing the total flow through the rear motor section. The front motor section receives lubrication oil through the valve section, and requires very little horsepower in this position, since it is only recirculating the fluid.

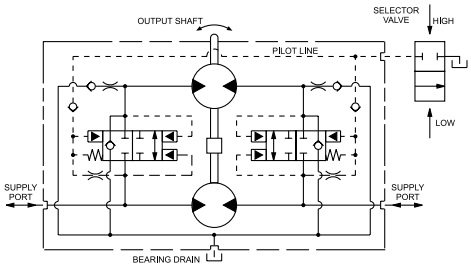

Performance Data Per Section

MOTOR MODELS	DISPLACEMENT/REVOLUTION(THEORETICAL)					TORQUE PER 1000 PSID*				POWER AT MAX. RPM/MAX.PSID*		MAXIMUM LIMITS				
						START		RUN				RELIEF SETTING		CONTINUOUS PRESSURE		CONTINUOUS SPEED
	US GALLONS	CUBIC INCHES	LITERS	CUBIC CM'S	IMPERIAL GALLONS	LB.IN.	NM	LB.IN.	NM	H.P.	KW	PSI	BAR	PSI	BAR	RPM
SPM25500	.0435	10.04	.165	164.52	.036	1400	1898	1600	2169	122	91.0	2500	172	1700	117	2000
SPM25550	.0479	11.06	.181	181.24	.040	1760	2386	1960	2657	146	109.0	2500	172	1700	117	2000
SPM25660	.0581	13.42	.220	219.91	.048	1820	2467	2200	2982	168	125.3	2500	172	1700	117	2000
SPM25770	.0671	15.50	.254	254.00	.056	2295	3111	2818	3820	187	139.4	2500	172	1700	117	2000

All data based on SAE 10W oil at 135°F. Available with Viton® Seals.
*Average values from performance curves.

CAUTION: Bearing drain line must not exceed 20 PSIG.

MOUNTING DIMENSIONS		
	FOR 'C' 2-BOLT & 'C' 4-BOLT	
MOTOR SIZES	A	B
SPM25500-500	270.2 (10.64)	451.1 (17.76)
SPM25500-550	270.2 (10.64)	455.6 (17.94)
SPM25500-660	270.2 (10.64)	465.0 (18.31)
SPM25500-770	270.2 (10.64)	482.0 (18.98)
SPM25550-500	274.8 (10.82)	455.6 (17.94)
SPM25550-550	274.8 (10.82)	460.2 (18.12)
SPM25550-660	274.8 (10.82)	469.6 (18.49)
SPM25550-770	274.8 (10.82)	486.6 (19.16)
SPM25660-500	285.4 (11.24)	466.3 (18.36)
SPM25660-550	285.4 (11.24)	470.9 (18.54)
SPM25660-660	285.4 (11.24)	480.3 (18.91)
SPM25660-770	285.4 (11.24)	497.3 (19.58)
SPM25770-500	294.8 (11.61)	475.7 (18.73)
SPM25770-550	294.8 (11.61)	480.3 (18.91)
SPM25770-660	294.8 (11.61)	489.7 (19.28)
SPM25770-770	294.8 (11.61)	506.7 (19.95)

SAE 4-Bolt NPT Connectors are available. See Accessory Section

MOUNTING DIMENSIONS					
SIZE	C	D	E	F	G
2"	84 (21.3)	42.8 (1.688)	38.8 (1.53)	77.7 (3.062)	1/2-13NC

Inch equivalents for millimeter dimensions are shown in (**).

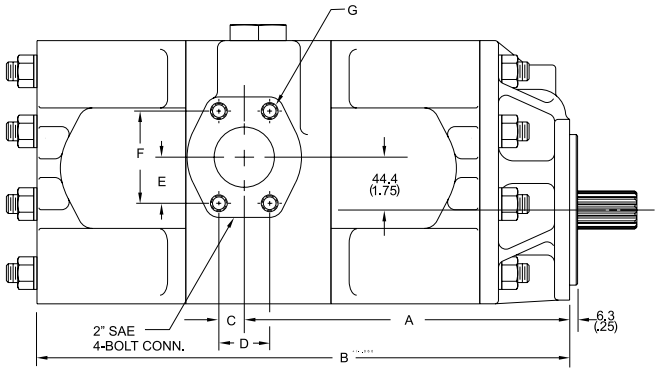

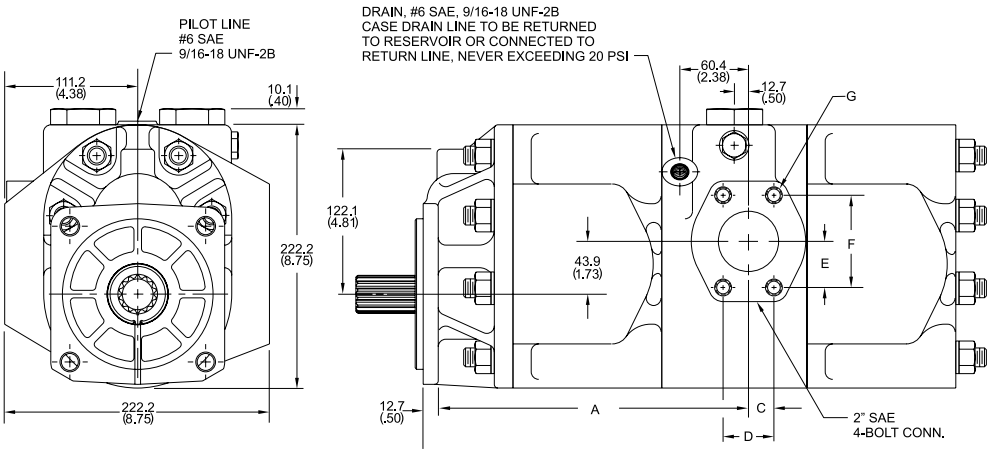

Parker Hannifin Corporation
Gear Pump Division
Youngstown, Ohio USA

Shafts Available for UM16 Motor Series

2 — 7/8" Dia. 13-Tooth Spline Flat Flat Root Side Fit

Torque Limit 184 Lbs. Ft. (249.4 Nm)
Available in all sizes and flanges

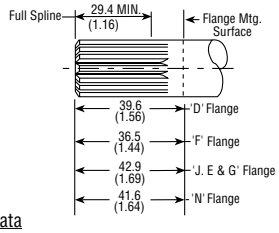

Spline Data

Diametral Pitch 16/32
Pressure Angle ..... 30°
No. Of Teeth 13

5 — 7/8" Straight Shaft Flat Root Side Fit

Torque Limit 184 Lbs. Ft. (249.4 Nm)
Available in all sizes and flanges

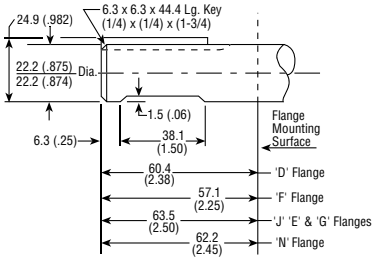

6 — 3/4" Straight Shaft

Torque Limit 105 Lbs. Ft. (142.3 Nm)
Available in sizes UM16 thru UM16-115 only and all flanges

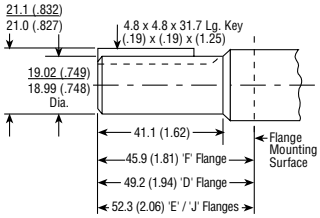

Shafts Available for M20 & SPM20 Motor Series

1 — SAE 'C' 1-1/4" 14-Tooth Spline Flat Root Side Fit

Torque Limit 655 Lbs. Ft. (888. Nm)
"Single" Motors only
Available on all sizes

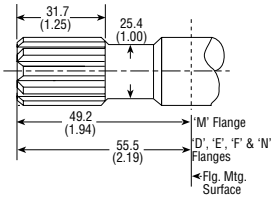

Spline Data

Diametral Pitch 12/24
Pressure Angle ..... 30°
No. Of Teeth 13

2 — 1" Dia. Straight Shaft

Torque Limit 341 Lbs. Ft. (462.3 Nm)
Available on M20100 thru M20350 only

CAUTION: Due to shaft torque limitations, Consult the Factory for approval before applying this shaft in models of -350 size and larger pumps.

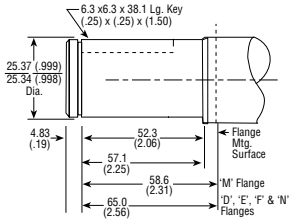

3 — SAE 'C' 1-1/4" Straight Shaft

Torque Limit 655 Lbs. Ft. (888. Nm)
Available on all sizes

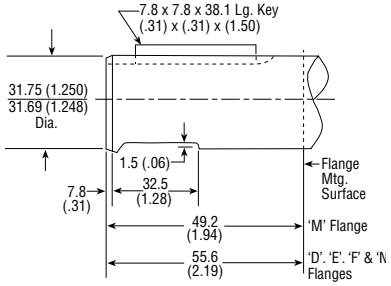

4 — 7/8" Dia. 13-Tooth Spline Flat Root Side Fit

Torque Limit 184 Lbs. Ft. (249.4 Nm)
Available on M20100 thru M20350 only

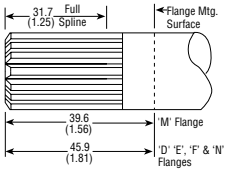

Spline Data

Diametral Pitch 16/32
Pressure Angle ..... 30°
No. Of Teeth 14

5 — 1-1/4" Straight Shaft

Torque Limit 655 Lbs. Ft. (888. Nm)
Available on all sizes

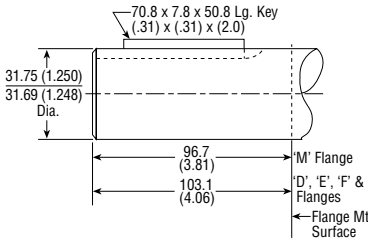

Inch equivalents for millimeter dimensions are shown in (**).

Shafts Available for M25 Motor Series

1 — SAE 'C' 1-1/4" 14 Tooth Spline Flat Root Side Fit

Torque limit 655 Lbs. Ft. (888.0 Nm)
Available for all single section sizes

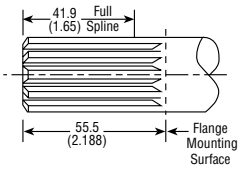

Spline Data

Diametral Pitch 12/24
Pressure Angle ..... 30°
No. Of Teeth 14

2 — SAE 'C' 1-1/4" Straight Shaft

Torque limit 655 Lbs. Ft. (888.0 Nm)
Available for all single section sizes only

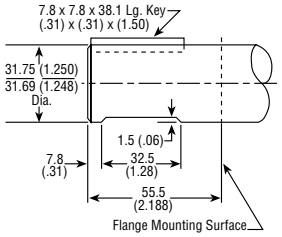

5 — 1-1/4" Straight Shaft

Torque limit 655 Lbs. Ft. (888.0 Nm)
Available for all single section sizes only

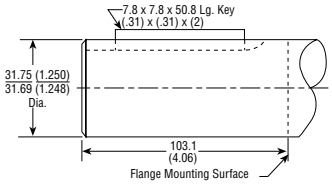

Parker Hannifin Corporation
Gear Pump Division
Youngstown, Ohio USA

Shafts Available for TM25 & SPM25 Motor Series

1 SAE 'C' 1-1/4" 14-Tooth Spline Flat Root Side Flt

Torque Limit 655 Lbs. Ft. (888. Nm)
"Tandem" Pumps Only
Available for SPM25450, SPM25500 and SPM2550 only

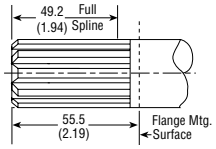

Spline Data

Diametral Pitch 12/24
Pressure Angle ..... 30°
No. Of Teeth 14

5 1-1/4" Straight Shaft

Torque Limit 655 Lbs. Ft. (888. Nm)
TM25 & SPM25 Motors available in 450, 500, 550, 660 & 770 sizes only

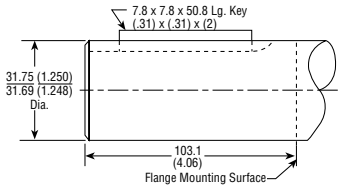

7 1-1/2" Dia. Straight Shaft

Torque Limit 1180 Lbs. Ft. (1600 Nm)
TM25 & SPM25 Motors available in 450, 500, 550, 660 & 770 sizes only

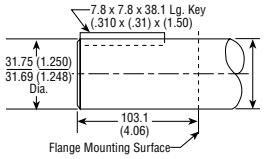

9 1-1/2" Dia. Straight Shaft

Torque Limit 1180 Lbs. Ft. (1600 Nm)
TM25 & SPM25 Motors available in 450, 500, 550, 660 & 770 sizes only

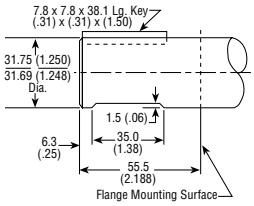

9 1-1/2" 17-Tooth Spline

Flat Root Side Fit
Torque Limit 1180 Lbs. Ft. (1600 Nm)
TM25 & SPM25 Motors available in 450, 500, 550, 660 & 770 sizes only

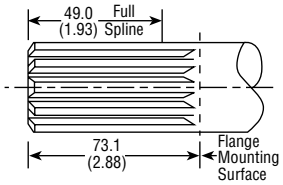

Spline Data

Diametral Pitch 10/20
Pressure Angle ..... 30°
No. Of Teeth 14

Inch equivalents for millimeter dimensions are shown in (**).

Cover Plates Available for UM16 Motor Series

1 Rear Ported Straight Thread

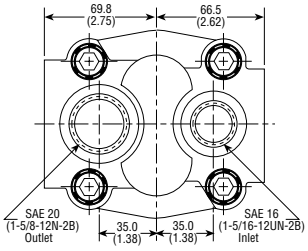

2 Rear Ported NPTF

7 Rear Ported BSPT

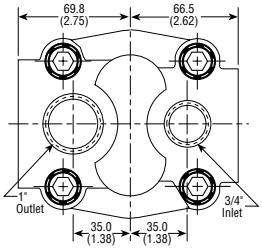

3 Side Ported SAE 4-Bolt

Metric Threads are available – Consult factory.
SAE 4-Bolt NPT Connectors Are Available.
See Accessory Section.

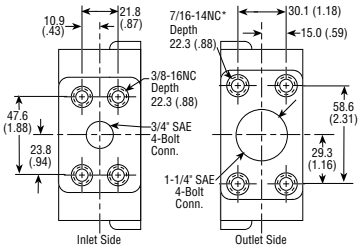

4 Side Ported NPT

8 Side Ported BSPT

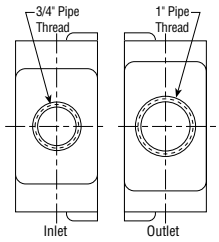

5 Side Ported Straight Thread SAE 12 Discharge

9 Side Ported Straight Thread SAE 16 Discharge

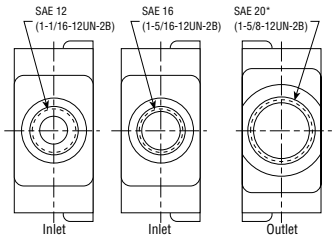

6 Rear Ported Straight Thread

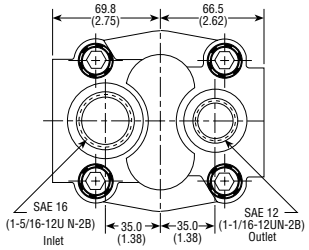

Parker Hannifin Corporation
Gear Pump Division
Youngstown, Ohio USA

Mounting Flanges Available for UM16 Motor Series

D **SAE 'A' 2-Bolt**

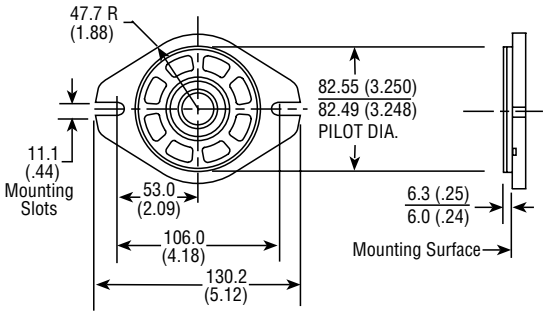

E **6-Bolt Round**
Available with No. 2 or 5 Shaft Only

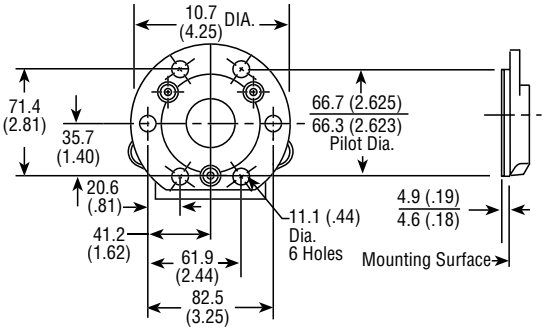

F **Pad Mount**

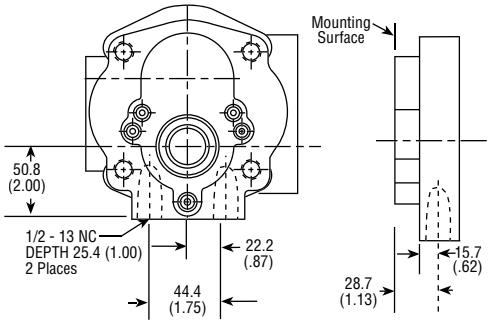

J **SAE 'B' 4-Bolt**
Available with No. 2, 5 or 6 Shaft Only (Typ.)

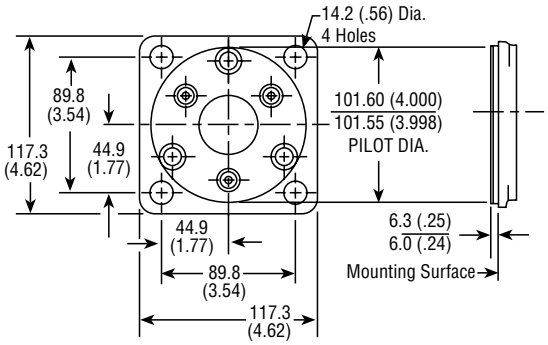

N **SAE 'B' 2-Bolt**

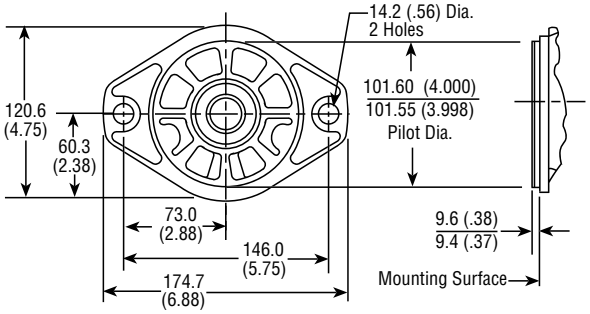

S **SAE 'C' 4-Bolt**
Available for No. 2, 5 or 6 Shaft Only

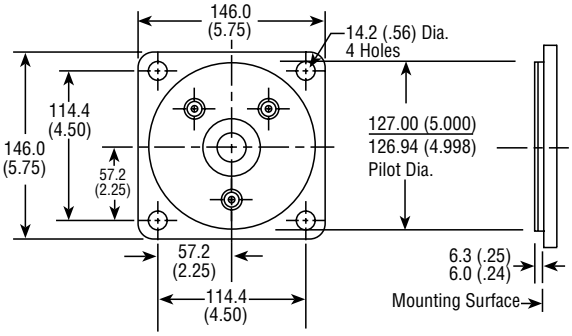

Inch equivalents for millimeter dimensions are shown in (**).

Parker Hannifin Corporation
Gear Pump Division
Youngstown, Ohio USA

Mounting Flanges Available for M20 Motor Series

M **'M' Pad Mount**
Available for M20 Series Only

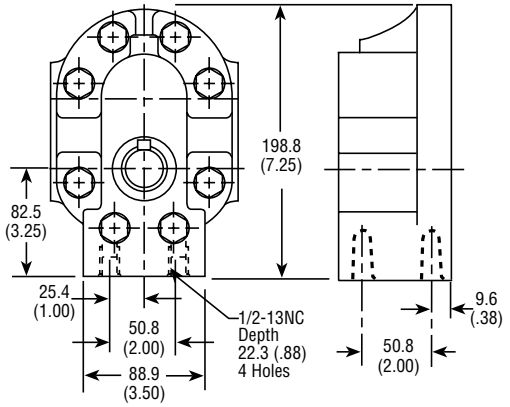

D **SAE 'C' 4-Bolt**
Available for M20 & SPM20 Series Only

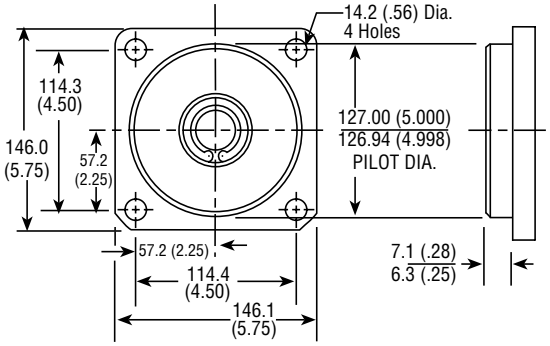

E **SAE 'B' 4-Bolt**
Available for M20 & SPM20 Series Only

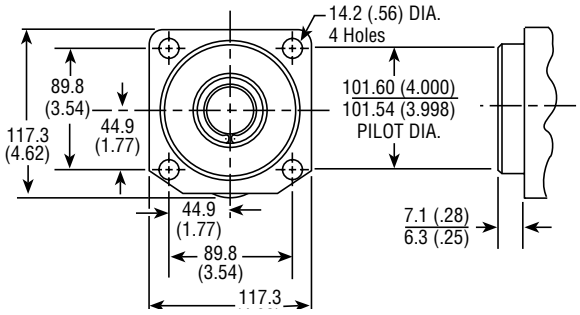

F **SAE 'C' 2-Bolt**
Available for M20, SPM20, M25, TM25 & SPM25 Series

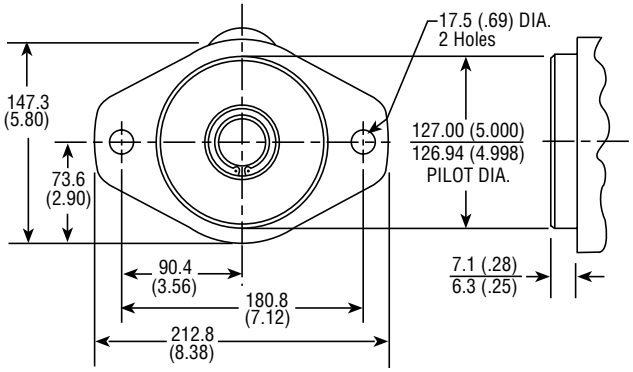

N **SAE 'B' 2-Bolt**
Available for M20 Series Only

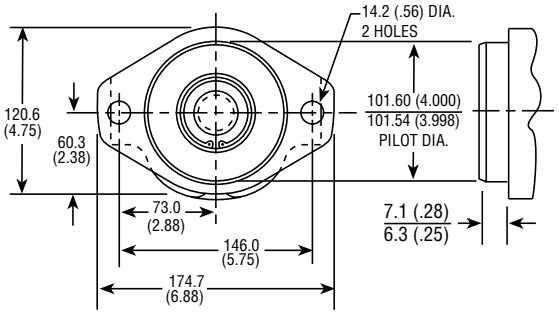

E **SAE 'C' 4-Bolt**
Available for M25 & SPM25 Series Only

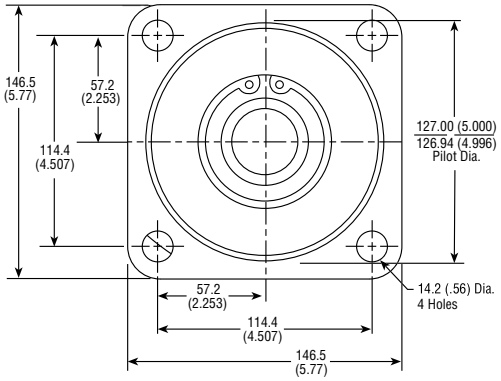

Inch equivalents for millimeter dimensions are shown in (**).

Parker Hannifin Corporation
Gear Pump Division
Youngstown, Ohio USA