| REVISIONS | | | | | |
|---|---|---|---|---|---|
| ECR | REVISION | DESCRIPTION | CHANGED BY | DATE | APPROVED BY |
| 3292 | H | CONVERTED MATERIAL TO 16GA. | JC | 10/11/2016 | FH |

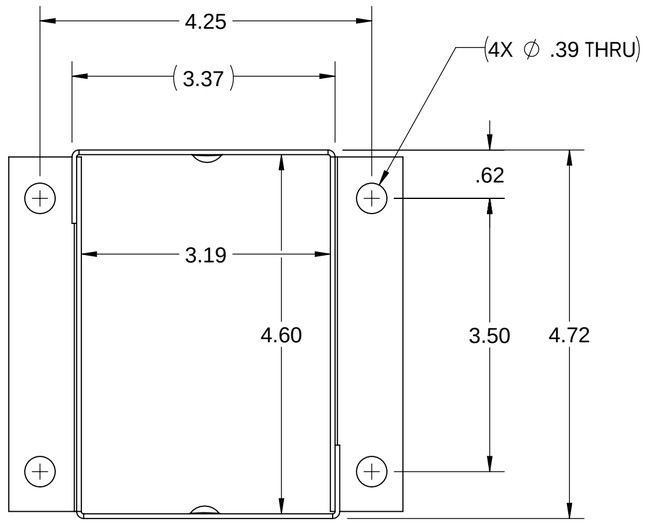


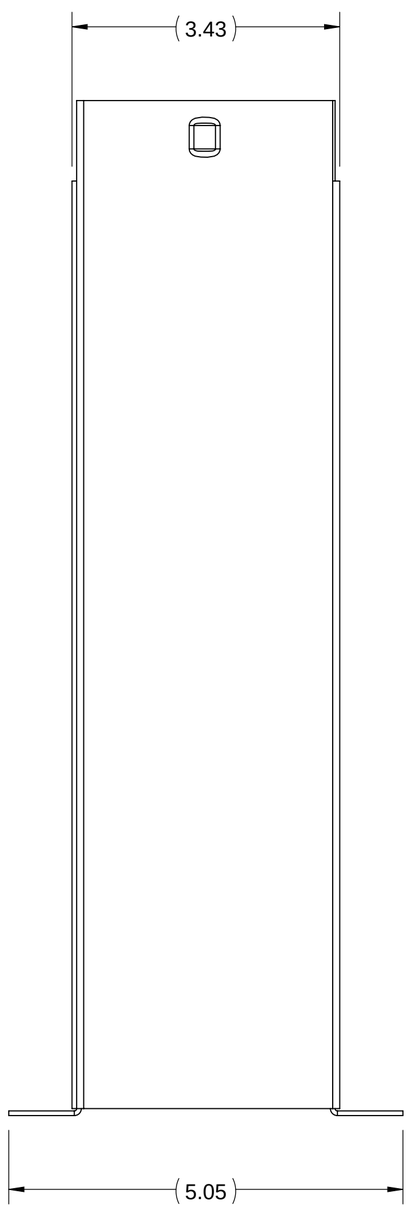


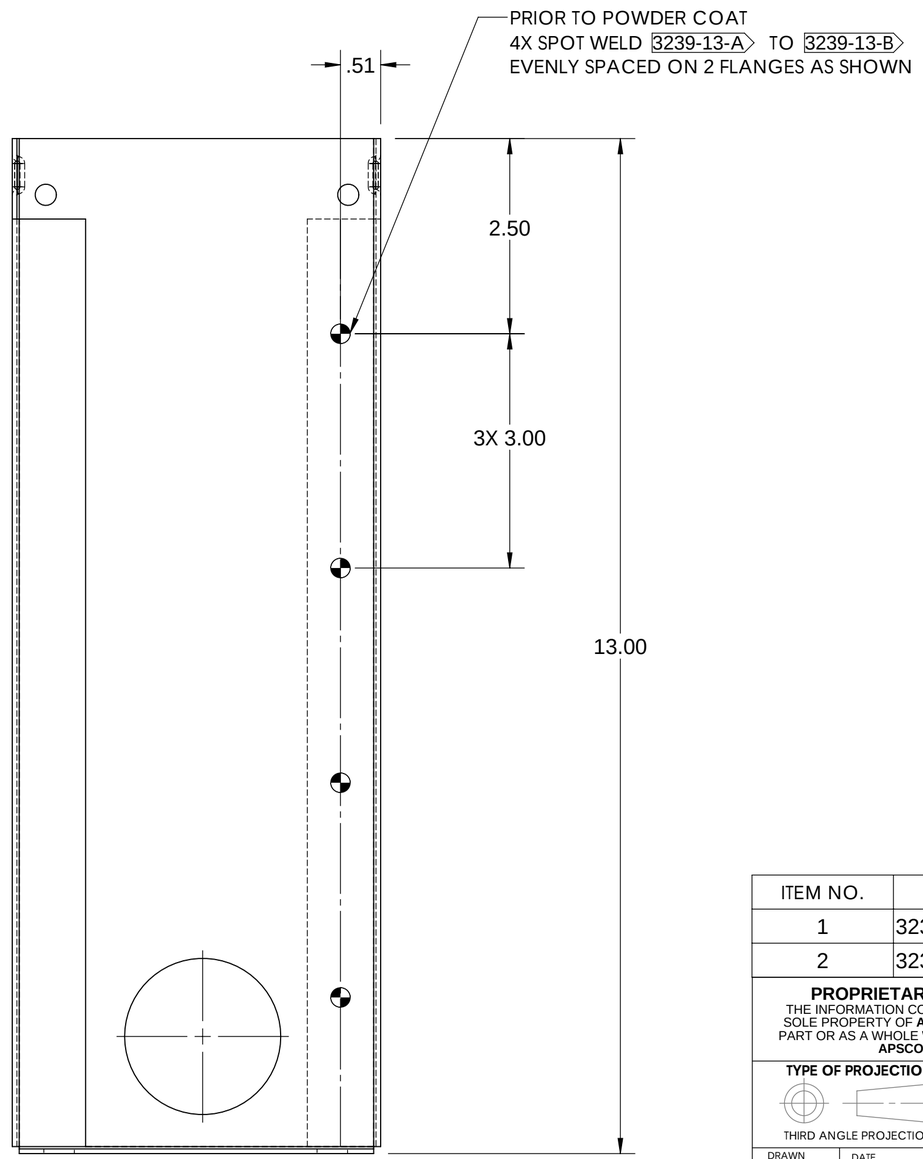


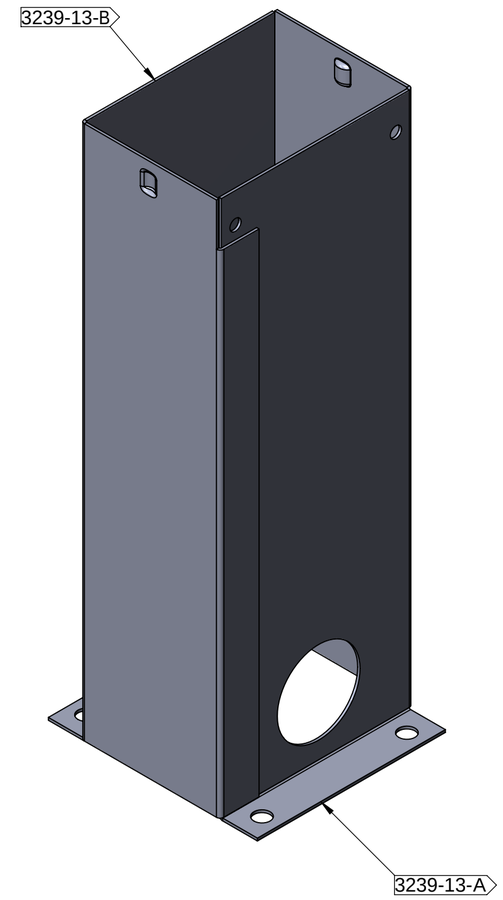


| ITEM NO. | PART NUMBER | DESCRIPTION | QTY. |
|---|---|---|---|
| 1 | 3239-13-A | CONSOLE BASE 13" | 1 |
| 2 | 3239-13-B | CONSOLE BASE 13" | 1 |

**PROPRIETARY AND CONFIDENTIAL**
THE INFORMATION CONTAINED IN THIS DRAWING IS THE SOLE PROPERTY OF **APSCO Inc.**. ANY REPRODUCTION IN PART OR AS A WHOLE WITHOUT WRITTEN PERMISSION OF **APSCO Inc.** IS PROHIBITED.

**TYPE OF PROJECTION**
THIRD ANGLE PROJECTION

MATERIAL
CRS 16GA. (.0598 THK.) A 1008 RM001105

FINISH
POWDER COAT LIGHT SEMI-GLOSS TEXTURED BLACK

| | | |
|---|---|---|
| DRAWN | JC | DATE 10/11/2016 |
| CHECKED | DJ | DATE 10/14/2016 |
| APPROVED | FH | DATE 10/14/2016 |
| FINAL | FH | DATE 10/14/2016 |

**APSCO**
**8178 EAST 44TH STREET**
**TULSA, OK 74145**
**(918) 622-5600**

TITLE: CONSOLE BASE 13" AV SERIES

DWG. NO. 3239-13

**FABRICATION TOLERANCE**
DO NOT SCALE DRAWING
**APEN001**

| SHEET SIZE | SCALE | REVISION |
|---|---|---|
| C | 2:3 | H |

F/N: 3239-13